POND STREET RESIDENCES
AT 12 POND STREET
ASHLAND, MASSACHUSETTS

JCBT # 20007



RENDERING ELEVATION ON POND STREET

OWNER/DEVELOPER - LEGACY CONSTRUCTION
11 PLACID ROAD
NEWTON, MA 02459
(781) 589-4113
CONTACT: CHARLES ZAMMUTO

ARCHITECT - JCBT ARCHITECT LLC
585 WASHINGTON STREET
QUINCY, MA 02169
(617) 404-8182
CONTACT: JIM CHEN, AIA, NCARB

SURVEYOR - DENNY LAND SURVEYING & ENGINEERING
51 PARK DRIVE
BOSTON, MA 02215
(617) 437-7993
CONTACT: DAVID DENNY, P.E. PLS

CIVIL ENGINEER - ENGINEERING ALLIANCE, INC.
194 CENTRAL STREET
SAUGUS, MA 01906
(781) 231-1349
CONTACT: RICK SALVO, P.E.

STRUCTURAL ENGINEER - BUSSIERE STRUCTURAL ENGINEER
342 CONDIA ROAD
MANCHESTER, NH 03109
(603) 860-2639
CONTACT: ROBERT RICHARD BUSSIERE, P.E.

MECHANICAL, ELECTRICAL, PLUMBING ENGINEER - STEVE SMITH, MECHANICAL ENGINEER
WILLIAM EKSTROM, LIGHTING ENGINEER
WILLIAM EKSTROM, ELECTRICAL ENGINEER

FIRE ALARM ENGINEER - WAYNE ALARM SYSTEM, INC.
424 ESSEX STREET
LYNN, MA 01902
(781) 595-0000
CONTACT: RALPH W. SEVINOR

FIRE PROTECTION ENGINEER - FRONT-LINE FIRE PROTECTION, LLC
1820 TURNPIKE STREET
NORTH ANDOVER, MA 01845
(978) 655-7002
CONTACT: JAMES LARKIN

DRAWING LIST

CS.1 COVER SHEET

C-1 EXISTING SITE CONDITION
C-2 SITE LAYOUT PLAN
C-3 GRADING, DRAINAGE & UTILITIES PLANS
C-4 LANDSCAPING PLAN
D-1 CIVIL CONSTRUCTION DETAILS

L-100 ARCHITECTURAL SITE PLAN

A-001 SYMBOLS, ABBREVIATIONS & CODE REVIEWS
A-002 WALL TYPES
A-101 GARAGE/FIRST FLOOR PLAN
A-102 SECOND FLOOR PLAN
A-103 THIRD FLOOR PLAN
A-104 ROOF PLAN
A-201 GARAGE/FIRST REFLECTED CEILING PLAN
A-202 SECOND FLOOR REFLECTED CEILING PLAN
A-203 THIRD FLOOR REFLECTED CEILING PLAN
A-301 BUILDING SECTION
A-302 BUILDING SECTION
A-401 EXTERIOR ELEVATIONS
A-402 EXTERIOR ELEVATIONS
A-403 ENLARGED EXTERIOR ELEVATIONS
A-501 EXTERIOR WALL SECTIONS
A-502 EXTERIOR WALL SECTIONS
A-503 EXTERIOR WALL SECTIONS
A-601 PLAN DETAILS
A-610 WALL DETAILS
A-615 WATERPROOFING DETAILS
A-620 ELEVATOR
A-625 STAIR #1 PLANS & SECTION
A-626 STAIR #2 PLANS & SECTION
A-627 STAIR DETAILS
A-660 ROOF DETAILS

A-700 DOOR SCHEDULE & DETAILS
A-701 TYPICAL DOOR FRAME DETAILS
A-702 WINDOW SCHEDULE & DETAILS
A-703 FINISH SCHEDULE
A-801 ENLARGED BATHROOM PLANS & ELEVATIONS
A-802 ENLARGED KITCHEN PLANS & ELEVATIONS

STRUCTURAL

S-001 STRUCTURAL GENERAL NOTES
S-002 STRUCTURAL TYPICAL DETAILS
S-100 FIRST FLOOR STEEL FRAMING PLAN
S-100a FOUNDATION PLAN
S-101 SECOND FLOOR WOOD TRUSSES FRAMING PLAN
S-102 THIRD FLOOR WOOD TRUSSES FRAMING PLAN
S-103 ROOF WOOD TRUSSES FRAMING PLAN
S-201 STEEL COLUMN & SCHEDULE
S-202 STRUCTURAL DETAILS
S-203 STRUCTURAL DETAILS
S-204 STRUCTURAL DETAILS

MECHANICAL

M-01 MECHANICAL HVAC GENERAL NOTES
M-02 MECHANICAL HVAC SCHEDULES & DETAILS
M-03 MECHANICAL HVAC GARAGE FLOOR PLAN DIAGRAM
M-04 MECHANICAL HVAC SECOND FLOOR PLAN DIAGRAM
M-05 MECHANICAL HVAC THIRD FLOOR PLAN DIAGRAM
M-06 MECHANICAL HVAC ROOF PLAN DIAGRAM

FIRE ALARM

FA-01 GARAGE FLOOR FIRE ALARM PLAN
FA-02 SECOND FLOOR FIRE ALARM PLAN
FA-03 THIRD FLOOR FIRE ALARM PLAN
FA-04 ROOF ROOF FIRE ALARM PLAN

FIRE PROTECTION

FP-01 GARAGE FLOOR FIRE SPRINKLER PLAN
FP-02 SECOND FLOOR FIRE SPRINKLER PLAN
FP-03 THIRD FLOOR FIRE SPRINKLER PLAN
FP-04 ROOF FLOOR FIRE SPRINKLER PLAN

ELECTRICAL

E-0 ELECTRICAL ONELINE DIAGRAM
E-1 GARAGE FLOOR ELECTRICAL PLAN
E-2 SECOND FLOOR ELECTRICAL PLAN
E-3 THIRD FLOOR ELECTRICAL PLAN
E-4 ROOF FLOOR ELECTRICAL PLAN

PERMIT SET

JCBT # 20007

CS.1

APRIL 1ST, 2020

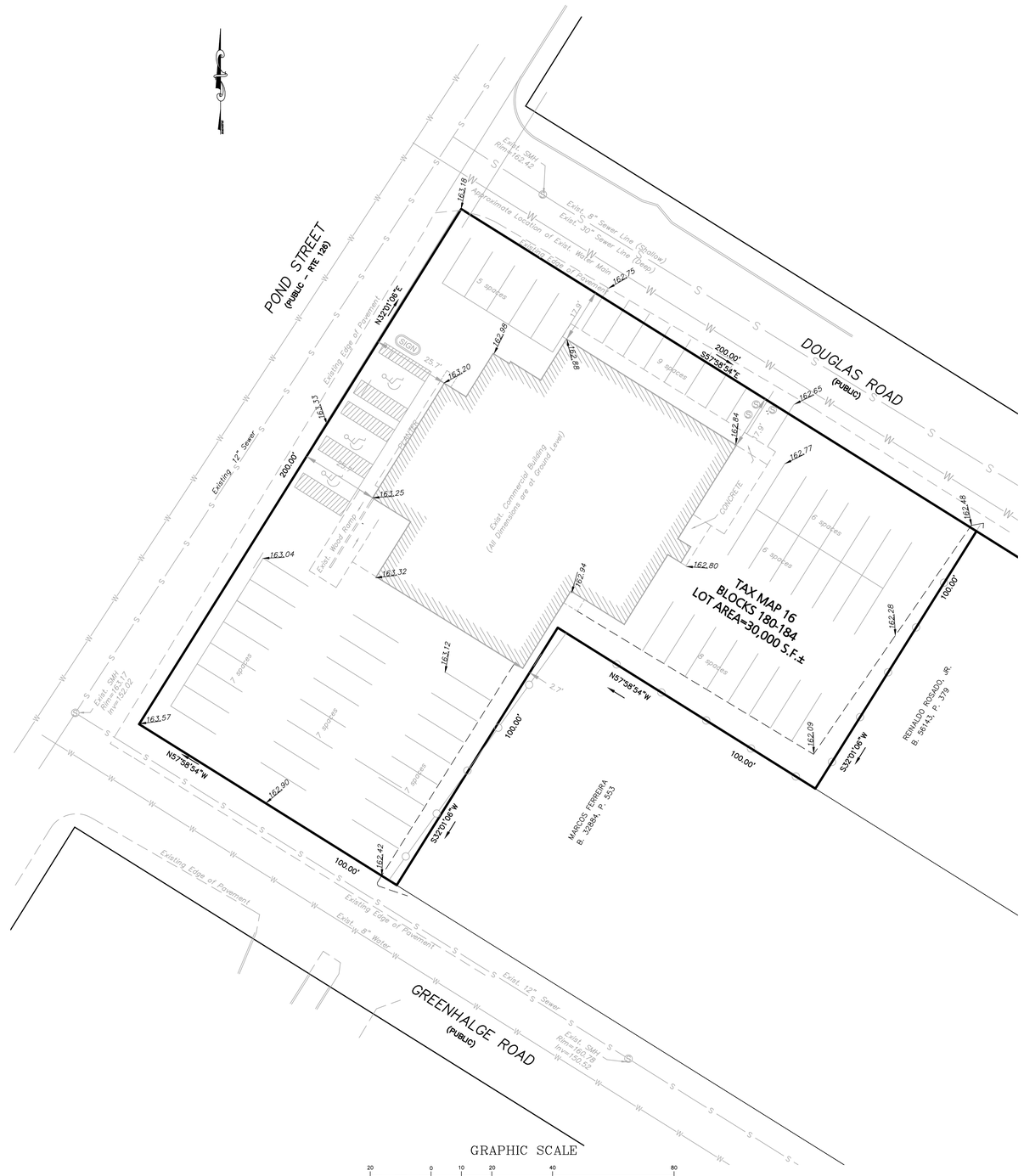

LEGEND - EXISTING CONDITIONS PLAN

PROPERTY LINE	
EXISTING CURB	
EXISTING SPOT ELEVATION	163.12
EXISTING BUILDING	
EXISTING CHAIN LINK FENCE	
EXISTING CONCRETE WALL	
EXISTING OVERHEAD WIRES	
EXISTING WATER	
EXISTING GAS	
EXISTING DRAIN	
EXISTING SEWER	
EXISTING UTILITY POLE	
EXISTING DRAIN MANHOLE	D
EXISTING SEWER MANHOLE	S
EXISTING ELECTRIC MANHOLE	E
EXISTING CATCH BASIN	

GENERAL NOTES:

OWNER OF RECORD: QUANG PHAT & KIM CHEN DIEP

DEED REFERENCE: BOOK 46541, PAGE 122

TAX MAP REFERENCE: MAP 16 BLOCK 180-184

DATUM REFERENCE: NAVD 1988

ACCORDING TO THE F.E.M.A MAP FOR SOUTHERN MIDDLESEX COUNTY, MAP No. 25017C0518F DATED JULY 16, 2014, THE PARCELS SHOWN ON THIS PLAN LIES WITHIN A ZONE "X" (OUTSIDE OF 0.02% CHANCE).

EXISTING CONDITIONS INFORMATION SHOWN ON THIS PLAN WAS COMPILED FROM AN ACTUAL FIELD SURVEY PERFORMED BY HAWK CONSULTING INC ON OCTOBER 16, 2016

DATE	DESCRIPTION OF REVISION

PREPARED BY:

Engineering Alliance, Inc.
Civil Engineering & Land Planning Consultants
194 Central Street
Saugus, MA 01906
Tel: (781) 231-1349
Fax: (781) 417-0020
1950 Lafayette Road
Portsmouth, NH 03801
Tel: (603) 610-7100
Fax: (603) 6107101

PROJECT:

Site Plan
12 Pond Street
(Tax Map 16 Blocks 180-184)
Ashland, Massachusetts

PROJECT #: 19-58506
DATE: August 5, 2019
SCALE: AS NOTED
DWG FILE NAME: 19-58506.dwg
DESIGN BY: Calvin Reach
CHECKED BY: Richard A. Salvo, P.E.

COMMONWEALTH OF MASSACHUSETTS
RICHARD A. SALVO
CIVIL
No. 41851
REGISTERED PROFESSIONAL ENGINEER

Professional Engineer for Engineering Alliance, Inc.

APPLICANT:

12 Pond Street Realty Trust.
11 Placid Road
Newton, MA 02459

DWG. NO.
C-1

DRAWING TITLE:
Existing Conditions Plan

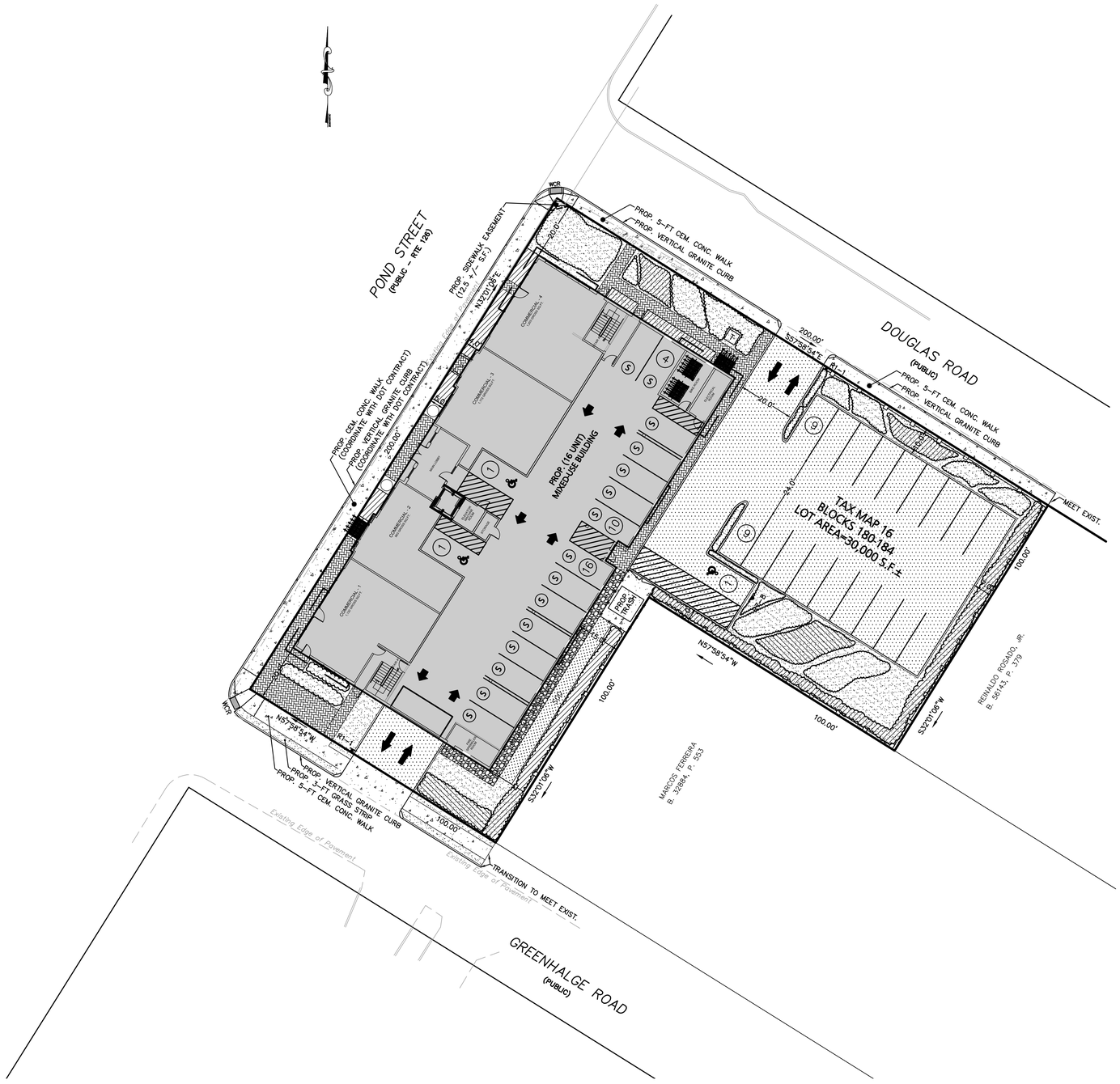

LEGEND - SITE LAYOUT PLAN

PROPERTY LINE	
EXISTING BUILDING	
EXISTING EDGE OF PAVEMENT	
EXISTING CURB	
PROPOSED BUILDING	
PROPOSED PARKING COUNT	3
MECHANICAL STACKER	S
PROPOSED TRAFFIC ARROW	
PROPOSED ACCESSIBLE PARKING SPACE	

LAND USAGE TABLE

CH (PSMUOD: OVERLAY DISTRICT)

ITEM	REQUIRED	PROVIDED	EXEMPT REQUESTED
MINIMUM LOT AREA (S.F.)	30,000 S.F.	30,000 S.F.	NO
MINIMUM FRONTAGE	150 FT	200 FT	NO
MINIMUM FRONT YARD SETBACK	0 FT	5 FT	NO
MINIMUM SIDE YARD SETBACK	10 FT	20 FT	NO
MINIMUM REAR YARD SETBACK	15 FT	15 FT	NO
MAXIMUM NUMBER OF STORIES	5	3	NO
MAXIMUM HEIGHT (FT)	35	35 FT	NO

PARKING CALCULATIONS

COMPONENT	REQUIRED	PROPOSED
MIXED-USE BUILDING RESIDENTIAL (16 UNITS)	24 SPACES (1.5 SPACES PER UNIT) 16 units x 1.5 spaces = 24 Spaces	30 SPACES (Garage Spaces) 2 SPACES (Gar. Accessible Parking)
COMMERICAL (4,202 S.F.)	17 SPACES (1 space per 250 S.F.) 4,202 S.F. / 250 = 16.8 Spaces	18 SPACES (Exterior Spaces) 1 SPACES (Ext. Accessible Parking)
TOTAL	41 SPACES	51 SPACES

NOTE:
1A. TOTAL NUMBER OF PARKING SPACES IN PARKING FACILITY: 51 SPACES
MINIMUM NUMBER OF ACCESSIBLE PARKING SPACES REQUIRED FOR 51-75 SPACES: 3 SPACES

2A. STANDARD PARKING SPACES ARE 9'X20'

SIGN TABLE

REGULATORY DESCRIPTION	SIGN	SIZE	MOUNTING HEIGHT (GROUND TO BOTTOM OF SIGN)	DESCRIPTION	REFLECTORIZED
R7-8	VOLUNTEERS WILL BE TAKEN AND VANDALIZED PARKING VAN	12" X 20"	7' - 0"	BLUE ON WHITE	YES
R1-1	STOP	24" x 24"	7' - 0"	WHITE ON RED	YES

DATE	DESCRIPTION OF REVISION
12/9/19	MODIFY PARKING, CURB CUTS AND SIDEWALKS

PREPARED BY:
Engineering Alliance, Inc.
Civil Engineering & Land Planning Consultants
194 Central Street
Saugus, MA 01906
Tel: (781) 231-1349
Fax: (781) 417-0020
1950 Lafayette Road
Portsmouth, NH 03801
Tel: (603) 610-7100
Fax: (603) 610-7101

PROJECT:
Site Plan
12 Pond Street
(Tax Map 16 Blocks 180-184)
Ashland, Massachusetts

PROJECT #: 19-58506
DATE: August 5, 2019
SCALE: AS NOTED
DWG FILE NAME: 19-58506.dwg
DESIGN BY: Calvin Reach
CHECKED BY: Richard A. Salvo, P.E.

COMMONWEALTH OF MASSACHUSETTS
RICHARD A. SALVO
CIVIL
No. 41851
REGISTERED PROFESSIONAL ENGINEER

Professional Engineer for Engineering Alliance, Inc.

APPLICANT:
12 Pond Street Realty Trust.
11 Placid Road
Newton, MA 02459

DRAWING TITLE:
Site Plan

DWG. NO.
C-2

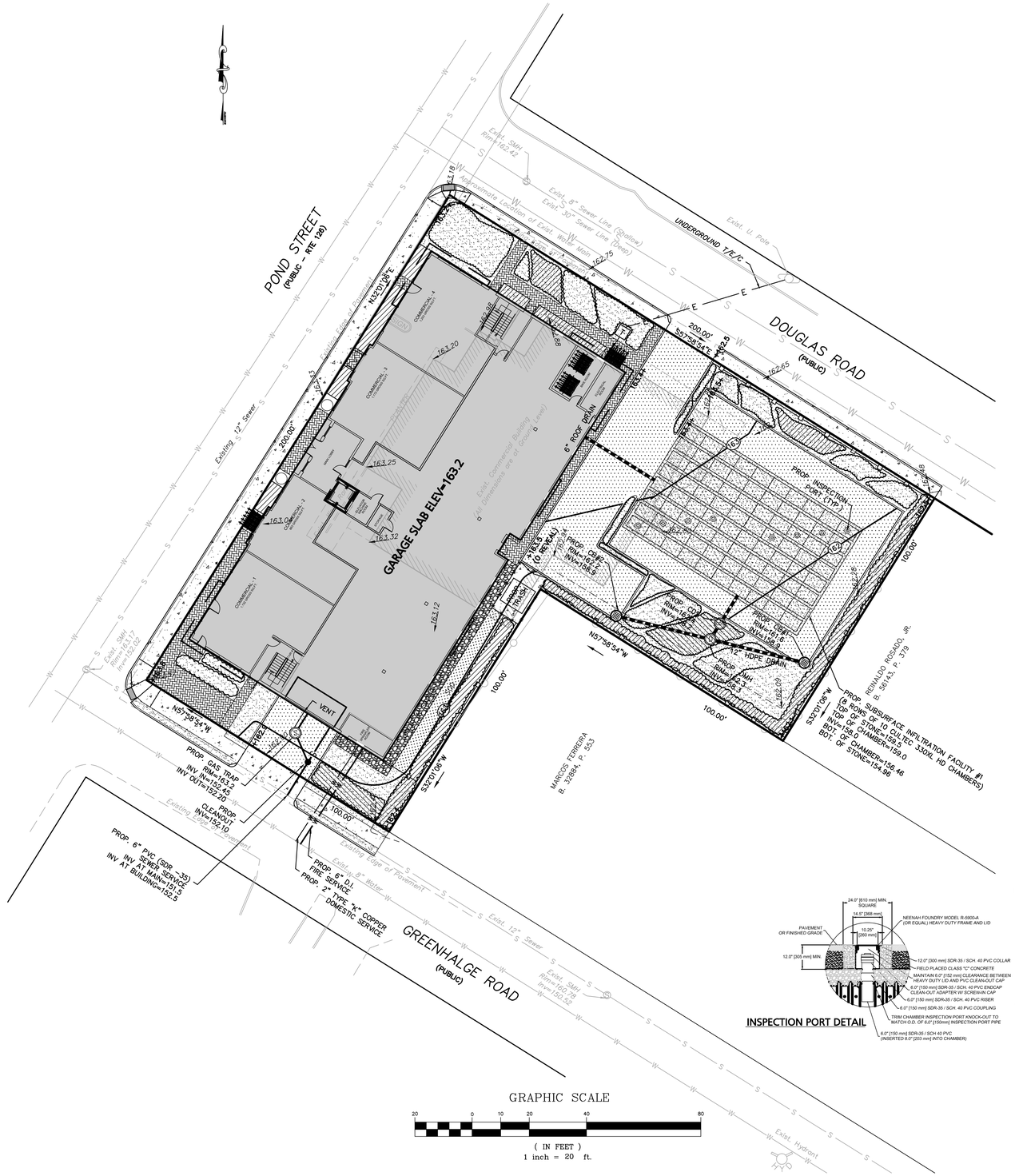
POND STREET
(PUBLIC - RTE 126)
DOUGLAS ROAD
(PUBLIC)
GREENHALGE ROAD
(PUBLIC)
GARAGE SLAB ELEV=163.2
Existing Commercial Building
All Dimensions are at Ground Level
Existing 12" Sewer
Exist. SMH
Rim=162.42
Approximate Location of Exist. Water Main
Exist. 8" Sewer Line (Shallow)
Exist. 30" Sewer Line (Deep)
UNDERGROUND T/E/C
Exist. U. Pole
N20°01'06"E
200.00'
N57°58'54"W
100.00'
S32°01'06"W
6" ROOF DRAIN
PROP. INSPECTION PORT (TYP.)
PROP. CB #2
RIM=162.5
INV=158.9
PROP. CB #1
RIM=162.5
INV=158.9
12" HDPE DRAIN
PROP. SMH
RIM=162.3
INV=156.3
PROP. SUBSURFACE INFILTRATION FACILITY #1
(6 ROWS OF 10 CULTEC 330XL HD CHAMBERS)
TOP OF STONE=162.5
BOT. OF STONE=159.0
TOP OF CHAMBER=159.5
BOT. OF CHAMBER=156.46
BOT. OF STONE=154.96
REINALDO RIOSMOTA, JR.
B. 50143, P. 379
MARCOS FERREIRA
B. 32684, P. 553
PROP. GAS TRAP
RIM=162.42
INV IN=152.42
INV OUT=152.20
PROP. CLEANOUT
INV=152.10
PROP. 6" PVC (SDR-35) SEWER SERVICE
INV AT MAIN=151.5
INV AT BUILDING=152.5
PROP. 4" D.I. FIRE SERVICE
PROP. 2" TYPE "K" COPPER DOMESTIC SERVICE
Existing Edge of Pavement
Exist. 8" Water
Exist. 12" Sewer
Exist. SMH
Rim=160.78
Inv=150.52
Exist. Hydrant
VENT
TRASH
COMMERCIAL 1
COMMERCIAL 2
COMMERCIAL 3
COMMERCIAL 4
163.20
163.25
163.04
163.32
163.12
162.75
162.68
162.65
162.62
162.59
162.56
162.53
162.50
162.47
162.44
162.41
162.38
162.35
162.32
162.29
162.26
162.23
162.20
162.17
162.14
162.11
162.08
162.05
162.02
161.99
161.96
161.93
161.90
161.87
161.84
161.81
161.78
161.75
161.72
161.69
161.66
161.63
161.60
161.57
161.54
161.51

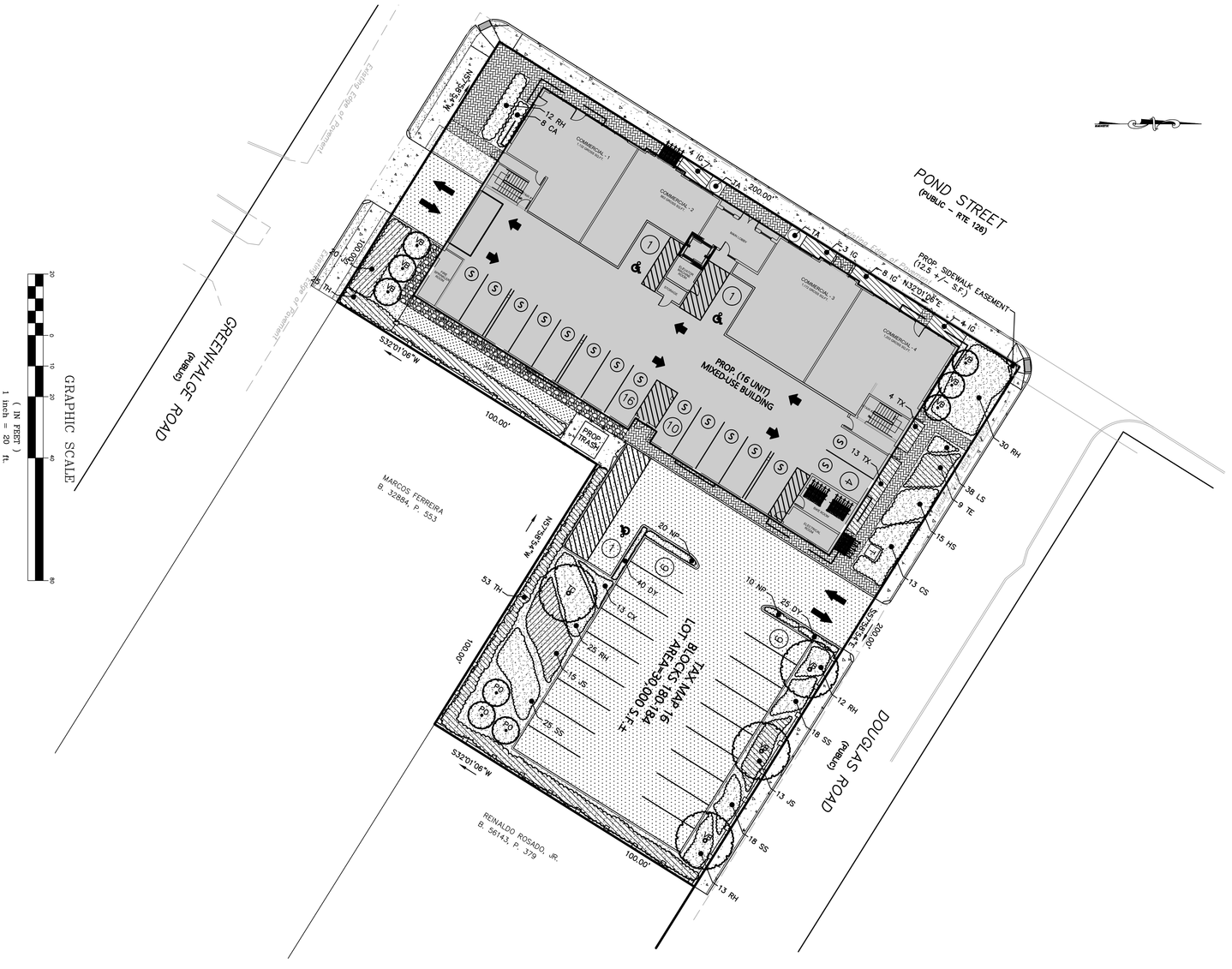

PLANT LIST

Key	Qty.	Botanical Name	Common Name	Size
		TREES		
GB	3	Ginkgo biloba	Maidenhair Tree (male)	2.5"-3" Cal.
TC	1	Tilia cordata	Littleleaf Linden 'Greenspire'	2.5"-3" Cal.
		SHRUBS		
CS	13	Cornus sericea	Red-Osier Dogwood 'Arctic Fire'	3 gal.
IG	19	Ilex glabra	Inkberry 'Shamrock'	3 gal.
JS	48	Juniperus chinensis	Juniper 'Sargentii'	3 gal.
PO	3	Physocarpus opulifolius	Ninebark 'Diablo'	3 gal.
RH	92	Rhus aromatica	Fragrant Sumac 'Grow-Low'	2 gal.
TA	2	Taxus cuspidata	Yew 'Capitata'	3.5'-4'
TE	9	Taxus media	Spreading Yew 'Everlow'	18"-24"
TX	17	Taxus media	Spreading Yew 'Greenwave'	18"-24"
TH	78	Thuja occidentalis	Arborvitae 'Emerald Green'	5'-6'
VB	6	Viburnum dentatum	Arrowwood Viburnum 'Chicago Lustre'	4'-5'
		PERENNIALS		
CA	8	Calamagrostis acutiflora	Feather Reed Grass 'Karl Foerster'	2 gal.
CX	13	Carex flacca	Sedge 'Blue Zinger'	1 gal.
DY	65	Hemerocallis	Daylily 'Big Time Happy'	1 gal.
HS	15	Hosta	Hosta 'Halcyon'	1 gal.
LS	38	Liriope spicata	Lily Turf	1 gal.
NP	30	Nepeta	Catmint 'Walker's Low'	1 gal.
SS	61	Sohlzachylium scoparium	Little Bluestem 'Twilight Zone'	2 gal.

APPLICANT:

12 Pond Street Realty Trust.
11 Placid Road
Newton, MA 02459

DWG. NO. C-4

DRAWING TITLE: Landscape Plan

MASSACHUSETTS MARY ANN O'NEILL REGISTERED LANDSCAPE ARCHITECT

Registered Landscape Architect for Engineering Alliance, Inc.

PROJECT:

Site Plan
12 Pond Street
(Tax Map 16 Blocks 180-184)
Ashland, Massachusetts

PROJECT #: 19-58506	DATE: August 5, 2019
SCALE: AS NOTED	DWG FILE NAME:19-58506.dwg
DESIGN BY: Calvin Reach	CHECKED BY: Richard A. Salvo, P.E.

PREPARED BY:

Engineering Alliance, Inc.
Civil Engineering & Land Planning Consultants
194 Central Street
Saugus, MA 01906
Tel: (781) 231-1349
Fax: (781) 417-0020

1950 Lafayette Road
Portsmouth, NH 03801
Tel: (603) 610-7100
Fax: (603) 6107101

DATE	DESCRIPTION OF REVISION
12/9/19	MODIFY PARKING, CURB CUTS AND SIDEWALKS
11/12/19	PER DESIGN REVIEW COMMENTS

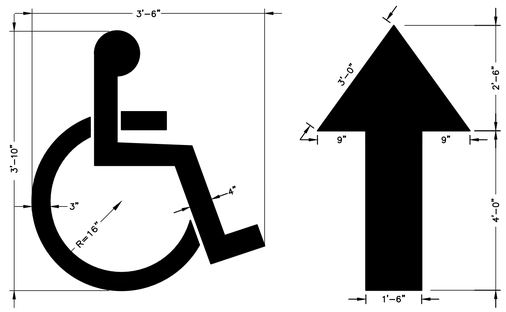

PAINTED HANDICAP SYMBOL & TRAFFIC ARROW DETAIL

NOT TO SCALE

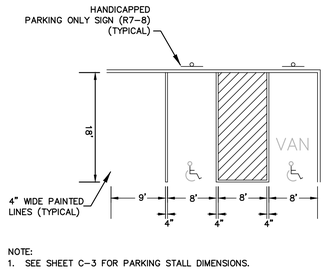

NOTE:
1. SEE SHEET C-3 FOR PARKING STALL DIMENSIONS.

HANDICAP AND STANDARD PARKING DETAIL

NOT TO SCALE

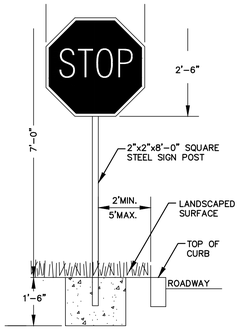

TYPICAL SIGN DETAIL

NOT TO SCALE

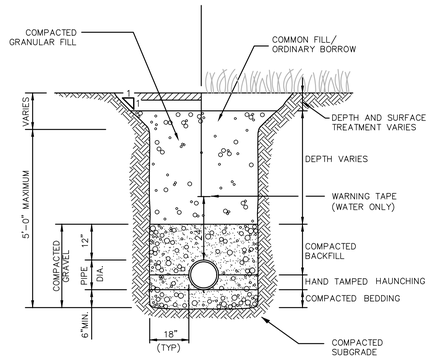

UTILITY TRENCH

NOT TO SCALE

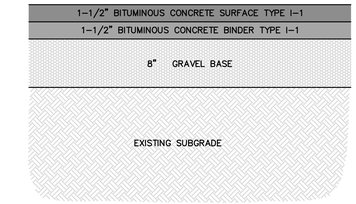

NOTES:
1. NEW STANDARD PAVEMENT SHALL CONSIST OF A 3" TOTAL THICKNESS IN ALL PAVED AREAS OF MASSHIGHWAY CLASS 1, TYPE 1 BITUMINOUS CONCRETE APPLIED IN TWO COURSES, ONE 1-1/2" SURFACE COURSE OVER ONE 1-1/2" BINDER COURSE OVER AN 8" GRAVEL BASE COURSE. COMPACT THE UPPER 12" OF PAVEMENT SUBGRADE, BASE COURSE, PAVEMENT BINDER AND SURFACE COURSES TO 95 PERCENT OF MAXIMUM DENSITY, AS DETERMINED FOR EACH MATERIAL BY THE APPLICABLE TEST METHODS.
2. OWNER'S ENGINEER RESERVES THE RIGHT TO REQUEST COMPACTION TESTS AND/OR CORE SAMPLES. IF TESTS ARE BEYOND THOSE REQUIRED BY THE SPECIFICATIONS AND PROVE CORRECT, PER ABOVE SPECIFICATION, TESTS WILL BE AT THE EXPENSE OF THE OWNER, OTHERWISE THE CONTRACTOR WILL BE RESPONSIBLE FOR TESTING COST

STANDARD PAVEMENT SECTION

NOT TO SCALE

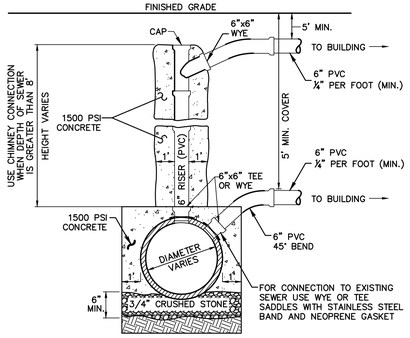

SANITARY SEWER SERVICE AT MAIN

NOT TO SCALE

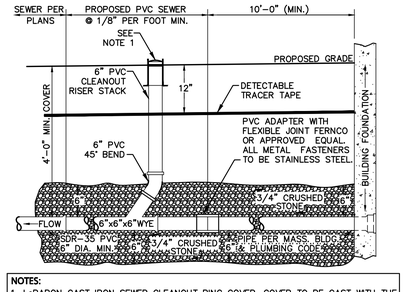

NOTES:
1. LeBARON CAST IRON SEWER CLEANOUT RING COVER. COVER TO BE CAST WITH THE WORD "CLEANOUT" AND HAVE FLAT DIAMOND SURFACE.

SANITARY SEWER SERVICE AT BUILDING

NOT TO SCALE

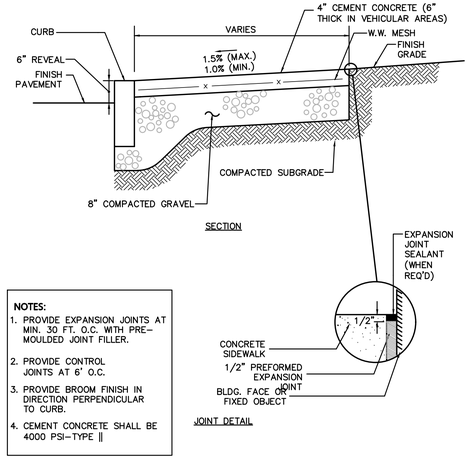

NOTES:
1. PROVIDE EXPANSION JOINTS AT MIN. 30 FT. O.C. WITH PRE-MOULDED JOINT FILLER.
2. PROVIDE CONTROL JOINTS AT 6' O.C.
3. PROVIDE BROOM FINISH IN DIRECTION PERPENDICULAR TO CURB.
4. CEMENT CONCRETE SHALL BE 4000 PSI-TYPE II

JOINT DETAIL

CONCRETE SIDEWALK

NOT TO SCALE

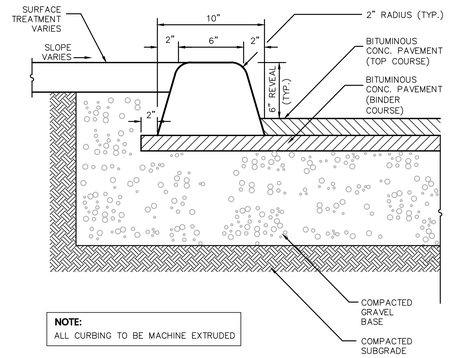

NOTE:
ALL CURBING TO BE MACHINE EXTRUDED

BITUMINOUS CURB

NOT TO SCALE

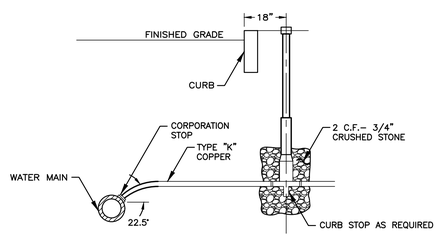

TYPICAL WATER SERVICE CONNECTION

NOT TO SCALE

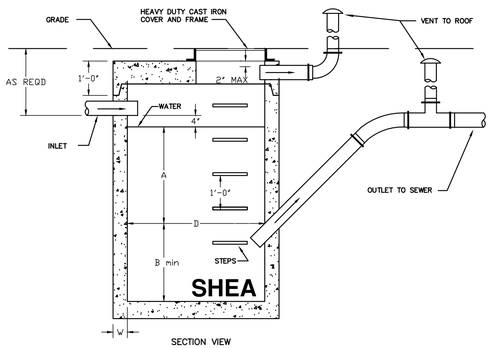

SECTION VIEW

NOTES:
1. CONCRETE: 4,000 PSI MINIMUM AFTER 28 DAYS.
2. MANHOLE DESIGN SPECIFICATIONS CONFORM TO LATEST ASTM C478 SPEC FOR "PRECAST REINFORCED CONCRETE MANHOLE SECTIONS."
3. BUTYL RESIN SECTION JOINT CONFORMS TO LATEST ASTM C443 SPEC.
4. STEEL REINFORCED COPOLYMER POLYPROPYLENE PLASTIC STEP CONFORMS TO LATEST ASTM C478 SPEC.
5. PIPE NOT SUPPLIED.
6. CONE SECTION AVAILABLE IN 4'-0" I.D. ONLY.
7. FOR INLETS LARGER THAN 10' THE DESIGN AND DIMENSION WILL BE DETERMINED FOR EACH PARTICULAR CASE.

INLET	D	A	B	W
4'	4'-0"	3'-0"	2'-6"	5'
5'	4'-0" 4'-0"x4'-0"	3'-6" 3'-0"	3'-0" 2'-6"	5' 6'
6'	4'-0" 4'-0"x4'-0" 5'-0"	5'-0" 4'-0" 3'-6"	4'-6" 3'-6" 3'-0"	5' 6' 6'
8'	5'-0" 6'-0" 8'-0"	6'-0" 4'-0" 3'-0"	5'-0" 3'-6" 2'-6"	6' 7' 9'
10'	6'-0" 8'-0"	6'-6" 5'-0"	5'-6" 4'-0"	7' 9'

GAS TRAP

SCALE: N.T.S.

DESCRIPTION OF REVISION | DATE

PREPARED BY:
Engineering Alliance, Inc.
Civil Engineering & Land Planning Consultants
1950 Lafayette Road
194 Central Street
Saugus, MA 01906
Portsmouth, NH 03801
Tel: (781) 231-1349
Tel: (603) 610-7100
Fax: (781) 417-0020
Fax: (603) 610-7101

PROJECT:
Site Plan
12 Pond Street
(Tax Map 16 Blocks 180-184)
Ashland, Massachusetts

PROJECT #: 19-98506 | DATE: August 5, 2019
SCALE: AS NOTED | DWG FILE NAME: 19-98506.dwg
DESIGN BY: Calvin Reach | CHECKED BY: Richard A. Salvo, P.E.

Professional Engineer for Engineering Alliance, Inc.

APPLICANT:
12 Pond Street Realty Trust.
11 Placid Road
Newton, MA 02459

DRAWING TITLE:
Construction Details

DWG. NO.
D-1

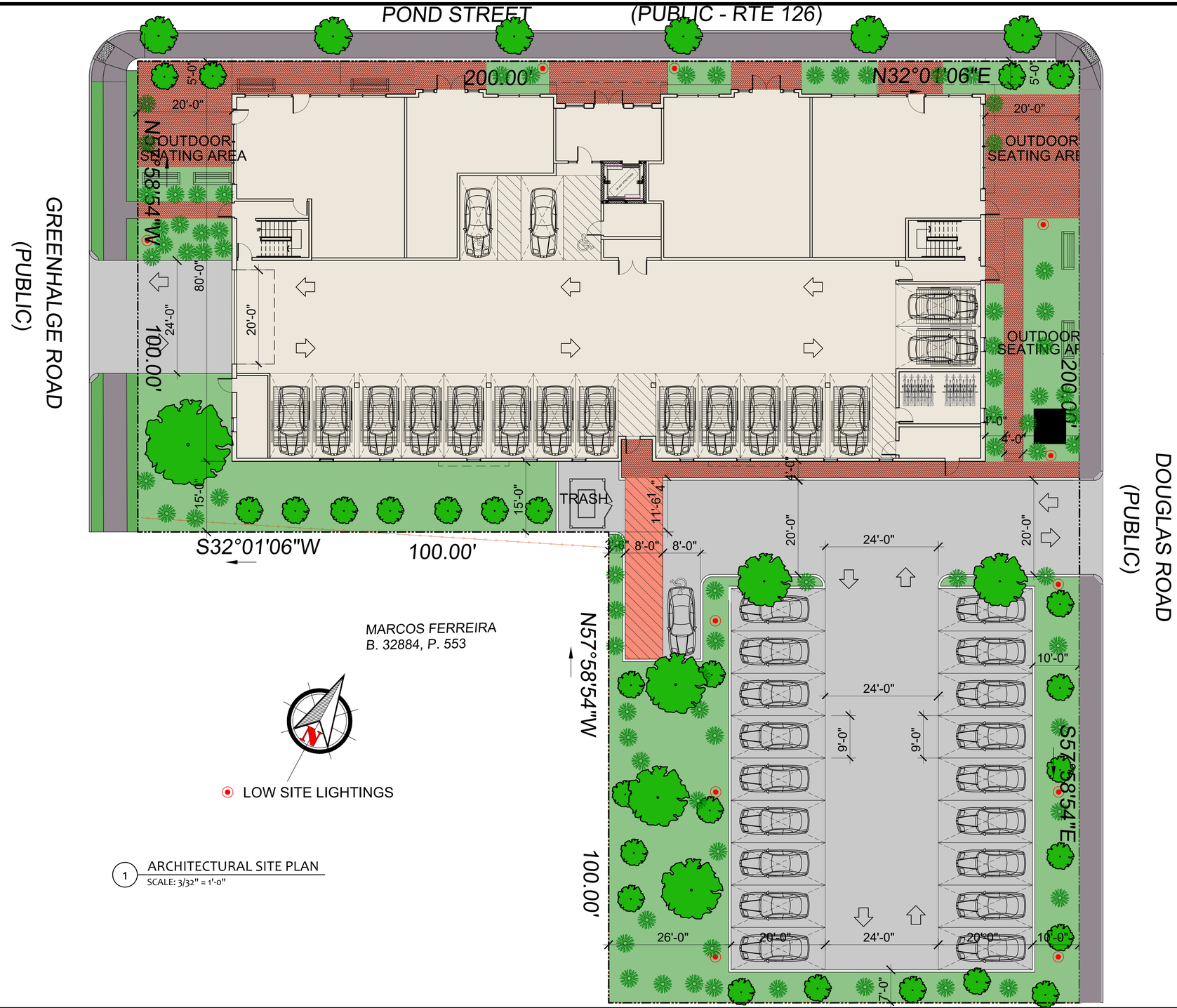

1 ARCHITECTURAL SITE PLAN
SCALE: 3/32" = 1'-0"

JC BT ARCHITECT
585 WASHINGTON STREET, QUINCY, MA 02169
ADMIN@JCBTARCHITECT.COM
TEL: (617) 404-8182

CONSULTANT

REGISTRATION

REGISTERED ARCHITECT JIM CHEN No. 51071 QUINCY, MA

04/01/2020

REVISIONS

NO.	BY	DESCRIPTION	DATE

PROJECT

POND STREET RESIDENCES

12 POND STREET
ASHLAND, MA 01721
JCBT PROJECT # 20007

SHEET TITLE
ARCHITECTURAL SITE PLAN

DRAWN:
SCALE: NOTED
DATE:
CHECKED:
SHEET OF

DRAWING NO:
L-100

ARCHITECTURAL ABBREVIATIONS

A/C	AIR CONDITIONING	DBL	DOUBLE	GA	GAGE, GAUGE	MACH	MACHINE	QT	QUARRY TILE	T	TREAD
ABV		DEPT	DEPARTMENT	GALV	GALVANIZED	MAS	MASONRY	QTY	QUANTITY	T & B	TOP AND BOTTOM
ACC	ACCESSIBLE	DET	DETAIL	GB	GRAB BAR	MAT	MATERIAL			T & G	TONGUE AND GROOVE
ACT	ACOUSTICAL TILE	DH	DOUBLE HUNG	GBVP	GYPSUM BASE VENEER PLASTER	MAX	MAXIMUM	R	RISER	TC	TERRA COTTA
ADH	ADHESIVE	DIA	DIAMETER	GL	GLASS	MECH	MECHANICAL	RA	RETURN AIR	TEL	TELEPHONE
ADJ	ADJACENT	DIM	DIMENSION	GMU	GLAZED MASONRY UNIT	MEMB	MEMBRANE	RAD	RADIUS	TEMP	TEMPORARY
ADJT	ADJUSTABLE	DISP	DISPOSAL	GR	GRADE	MFR	MANUFACTURE(R)	RB	RESILIENT BASE	THK	THICKNESS
AFF	ABOVE FINISHED FLOOR	DN	DOWN	GWB	GYPSUM WALL BOARD	MH	MANHOLE	RCP	REFLECTED CEILING PLAN	T.I.	TAPERED INSULATION
ALT	ALTERNATE	DR	DOOR			MIN	MINIMUM	RD	ROOF DRAIN	TOC	TOP OF CONCRETE
ALUM	ALUMINUM	DW	DISHWASHER	HC	HANDICAPPED	MISC	MISCELLANEOUS	REF	REFRIGERATOR	TOF	TOP OF FOOTING
ANOD	ANODIZED	DWG	DRAWING	HDBD	HARDBOARD	MLDG	MOLDING	REFL	REFLECTED	TOJ	TOP OF JOIST
AP	ACCESS PANEL			HDWE	HARDWARE	MO	MASONRY OPENING	REINF	REINFORCED	TOS	TOP OF STEEL
APPROX	APPROXIMATE(LY)	E	EAST	HM	HOLLOW METAL	MOD	MODULAR	REM	REMOVE	TOW	TOP OF WALL
ARCH	ARCHITECTURAL	EA	EACH	HOR	HORIZONTAL	MR	MOISTURE RESISTANT	REQD	REQUIRED	TYP	TYPICAL
AUTO	AUTOMATIC	EJ	EXPANSION JOINT	HP	HIGH POINT	MTD	MOUNTED	REV	REVISION	TZ	TERRAZZO
AVG	AVERAGE	EL	ELEVATION	HR	HOUR	MTL	METAL	RH	RIGHT HAND		
		ELEC	ELECTRIC(AL)	HT	HEIGHT			RM	ROOM	UL	UNDERWRITERS LABORATORY
BD	BOARD	ELEV	ELEVATION, ELEVATOR	HVAC	HEATING, VENTILATION & AIR CONDITIONING	N	NOT APPLICABLE	RO	ROUGH OPENING		
BET	BETWEEN	EMER	EMERGENCY			N/A	BOARD	RT	RESILIENT TILE	VCT	VINYL COMPOSITION TILE
BIT	BITUMINOUS	ENC	ENCLOSURE			NIC	NOT IN CONTRACT	RUB	RUBBER	VERT	VERTICAL
BLDG	BUILDING	EQ	EQUAL	ID	INSIDE DIAMETER	NO	NUMBER	RWC	RIAN WATER CONDUCTOR	VEST	VESTIBULE
BLK	BLOCK	EQUIP	EQUIPMENT	IN	INCH	NOM	NOMINAL			VIF	VERIFY IN FIELD
BM	BEAM	EXH	EXHAUST	INCL	INCLUDED	NTS	NOT TO SCALE	S	SOUTH	VIN	VINYL
BOT	BOTTOM	EXIST	EXISTING	INSUL	INSULATED			SCH	SCHEDULE	VP	VENEER PLASTER
BOW	BOTTOM OF WALL	EXP	EXPANSION, EXPOSED			OA	OVERALL	SCW	SOLID CORE WOOD	VR	VAPOR RETARDER
BRG	BEARING	EXT	ARCHITECTURAL	INT	INTERIOR	OC	ON CENTER	SD	SOAP DISPENSER	VWC	VINYL WALL COVERING
BRKT	BRACKET	AUTO	AUTOMATIC	INV	INVERT(ED)	OD	OUTSIDE DIAMETER	SEC	SECTION		
BSMNT	BASEMENT	AVG	EXTERIOR			OH	OVERHEAD	SHLV	SHELVING	W	WEST
BUR	BUILT UP ROOFING			J	JANITOR	OPG	OPENING	SHR	SHOWER	W/	WITH
		FA	FIRE ALARM	JST	JOIST	OPH	OPPOSITE HAND	SHT	SHEET	W/O	WITHOUT
CAB	CABINET	FAB	FABRICATED	JT	JOINT	OPP	OPPOSITE	SHT MTL	SHEET METAL	WC	WATER CLOSET
CBB	CEMENTIOUS BACK BOARD	FD	FLOOR DRAIN			OZ	OUNCE	SIM	SIMILAR	WD	WOOD
CIRC	CIRCULATION	FE	FIRE EXTINGUISHER	K	KITCHEN			SOG	SLAB ON GRADE	WH	WALL HYDRANT
CJ	CONTROL JOINT	FEC	FIRE EXTINGUISHER CABINET			PAN	PANTRY	SPEC	SPECIFICATION	WIN	WINDOW
CLG	CEILING	FF	FINISHED FLOOR	LAM	LAMINATED	PART	PARTITION	SQ	SQUARE	WM	WIRE MESH
CLO	CLOSET	FIN	FINISHED	LAV	LAVATORY	PDB	PARTICLE BOARD	SS	STAINLESS STEEL	WP	WATERPROOF
CLR	CLEAR	FIXT	FIXTURE	LB	POUND	PC	PIECE	SRAB	SHEET RUBBER ASPHALTIC BARRIER	RT	RESILIENT TILE
CMU	CONCRETE MASONRY UNIT	FLR	FLOORING	LCC	LEAD COATED COPPER	PERF	PERFORATED	STC	SOUND TRANSMISSION CLASS	WPG	WATERPROOFING
CO	CLEAN OUT	FLUOR	FLUORESCENT	LH	LEFT HAND	PL	PLATE	STD	STANDARD	WT	WEIGHT
COL	COLUMN	FND	FOUNDATION	LP	LOW POINT	PLAM	PLASTIC LAMINATE	STL	STEEL	WWF	WELDED WIRE FABRIC
CONC	CONCRETE	FOM	FACE OF MASONRY	LS	LIGHT SWITCH	PLAS	PLASTIC	STOR	STORAGE		
CONST	CONSTRUCTION	FOS	FACE OF STUD	LT	LIGHT	PLWD	PLYWOOD	STRUCT	STRUCTURAL		
CONT	CONTINOUS	FR	FIRE RATED	LVR	LOUVER	PNL	PANEL	SUSP	SUSPENDED		
CONTR	CONTRACT(OR)	FND	FOUNDATION	LWT	LIGHTWEIGHT	PNT	POINT	STRUCT	STRUCTURAL		
COP	COPPER	FRT	FIRE RETARDANT TREATED			PPT	PRESSURE TREATED				
CPT	CARPET(ED)	FSTN	FASTEN(ER)			PR	PAIR				
CRS	COLD ROLLED STEEL	FTG	FOOTING			PREFAB	PREFABRICATED				
CT	CERAMIC TILE	FUR	FURRING			PROP	PROPOSED				
CTR	CENTER					PSF	POUNDS PER SQUARE FOOT				
						PTD	PAINTED				
						PVC	POLYVINYL CHLORIDE				
						PVMNT	PAVEMENT				

ARCHITECTURAL STANDARD SYMBOLS

- Third Floor — SPOT ELEVATION KEY
- 3 / 2 / 1 — INTERIOR/EXTERIOR ELEVATIONS
- 10 / A-711 — WALL SECTION
- 12 / 4 — ROOF PITCH
- WINDOW TYPE
- 4 — PARTITION TYPE
- 1 — DOOR TYPE
- ℄ — CENTER LINE

ARCHITECTURAL MATERIALS SYMBOLS - SECTION

- EARTH
- POROUS FILL, GRAVEL, STONE, etc.
- CONCRETE (LARGE SCALE)
- CONCRETE (PRECAST)
- BRICK, COMMON OR FACE
- CONCRETE MASONRY UNIT
- CUT STONE (LARGE SCALE)
- GLASS
- GYPSUM WALLBOARD PLASTER, SAND, GROUT, MORTAR
- CERAMIC TILE
- RIGID INSULATION
- INSULATION, LOOSE OR BATT
- WOOD (ROUGH)
- SHIM
- wood (finished)
- plywood (large scale)

ARCHITECTURAL MATERIALS SYMBOLS - ELEVATION

- BRICK, CMU
- WOOD, PLYWOOD
- CONCRETE
- CERAMIC TILE
- RUNNING BOND

12 POND STREET- ASHLAND, Mass.

Massachusetts State Building Code Review

1. Section 310.4 - Building is classified as Use Group R-2
2. Section 311.3 - Parking garage is classified as Use Group S-2.
3. Table 313.1.2 - Fire rating between use groups R-2 and S-2 is 2 hrs.
4. Section 313.1.2 - Exception - Where the building is equipped with an automatic sprinkler system, the fire separation assembly shall be reduced by 1 hour, but not less than 1 hour or not less than that required by Table 602 for floor construction.
5. Section 408.2 - Parking garage is classified Group 2
6. Section 408.3 - Parking garage is classified as Use Group S-2.
7. Section 408.3.1 - All parking garages shall be equipped throughout with an automatic sprinkler system when :
   1. Fire area exceeds 12,000s.f.
   4. Where located beneath other use groups
8. Section 408.5 - All public garages shall be ventilated.
9. Table 503 - Building is type 5A construction (combustible, protected) and use group R-2 which allows 3 stories at 40ft. in height and 10,200s.f. area.
10. Table 503 - Parking Garage is type 5A construction (combustible, protected) and use group S-2 which allows 3 stories at 40ft. in height and 15,300s.f. area.
11. Section 503.3 - A basement shall be considered a story above grade when:
    1. The floor above the basement is more than 6ft. above the grade plane.
    2. The floor above the basement is more than 6ft. above the ground level for more than 50% of the building perimeter.
    3. The floor above the basement is more than 12ft. above the ground level at any point.

12. Section 504.2 - Automatic Sprinkler System Modification (Height) - Where the building is equipped with an automatic sprinkler system the height limitations specified shall be increased 1 story and 20ft. in height.
13. Section 506.2 - Street Frontage Increase (Area) - Where a building has more than 25% of its perimeter fronting on a street or other unoccupied space, the area limitations shall be increased 2% for each 1% of such excess. The space shall not be less than 30ft. in width and shall have access from a street by a posted fire lane not less than 18ft. in width.
14. Section 506.3 - Automatic Sprinkler System Modification (Area) - Where the building is equipped with an automatic sprinkler system the area limitation shall be increased 100% for buildings more than two stories in height.
15. Section 506.4 - Multistory Building Modification (Reduction) - In buildings over two stories in height, the area limitations shall be reduced per table 506.4.
16. Table 506.4 - Reduction of Area Limitations for Building - 4 stories = 20% area reduction.
17. Table 506.4 - Reduction of Area Limitations for Parking Garage - 1 story = No area reduction.
18. Table 602 - Building is type 5A construction (combustible, protected) :
    1. Exterior load-bearing walls - 10ft or less 1hr Table 705.2
    2. Fire and party walls 2hr Table 707.1
    3. Fire enclosure of exits 2hr
    4. Shafts and elevators 2hr Section 710.3
    5. Mixed use and fire separations 2hr Table 313.2
    6. Exit access corridors 1/2hr Table 1011.4
    7. Tenant space separation 1/2hr Section 1011.4.1
    8. Dwelling unit separation 1/2hr. Table 1011.4
    9. Other non-load bearing partitions 0hr
    10. Interior load-bearing construction supporting more than 1 floor -1hr
    11. Interior load-bearing construction supporting only 1 floor or roof-1hr
    12. Structural members supporting walls - 1hr
    13. Floor and beam construction 1hr
    14. Roof construction 15ft or less 1hr

19. Table 602 - Parking Garage is type 5A construction (combustible, protected) :
    1. Exterior load bearing walls - 5ft or less 2hr Table 705.2
    2. Exterior load bearing walls - 10ft or less 1hr Table 705.2
    3. Fire and party walls 2hr Table 707.1
    4. Fire enclosure of exits 2hr
    5. Shafts and elevators 2hr Section 710.3
    6. Mixed use and fire separations 2hr Table 313.2
    7. Exit access corridors 1/2hr Table 1011.4
    8. Other non-load bearing partitions 0hr
    9. Interior load bearing construction supporting more than 1 floor 1hr
    10. Interior load bearing construction supporting only 1 floor or roof 1hr
    11. Structural members supporting walls 1hr
    12. Floor and beam construction 1hr

20. Table 705.2 - Building exterior wall fire-resistance rating:
    1. 0ft. to 5ft. = 1hr.
    2. 5ft. to 10ft. = 1hr.
    3. Greater than 10 ft. = 0hr.

21. Table 705.2 - Parking garage exterior wall fire-resistance rating:
    1. 0ft. to 5ft. = 2hr.
    2. 5ft. to 10ft. = 1hr.
    3. Greater than 10 ft. = 0hr.

22. Table 705.3 - Maximum area of exterior wall openings (unprotected): See Section 705.3.1
    1. 0ft. to 3ft. Not Permitted
    2. 3ft. to 5ft. 15%
    3. 5ft. to 10ft. 25%
    4. 10ft. to 15ft. 45%
    5. 15ft. to 20ft. 75%
    6. 20ft. to 25ft. No Limit
    7. 25ft. to 30ft. No Limit
    8. 30ft. or greater No Limit

23. Section 705.3.1 - In buildings equipped with an automatic sprinkler system, the maximum allowable area of unprotected openings shall be the same as protected openings.
24. Section 705.4 - Exception - Section 705.4 Shall not apply to buildings equipped with an automatic sprinkler system.
25. Section 705.5 - Openings that are less than 15ft. vertically above the roof of an adjoining structure or less than 15ft. horizontally from an adjacent buildings roof shall be protected unless the roof construction provides a fire-resistance rating of not less than 1hr.
26. Table 707.1 - Fire and party wall minimum fire-resistance rating for use groups R-2 and S-2 is 2hr.
27. Section 710.3 - A shaft shall have a fire-resistance rating of not less than 2hr. where the shafts connect four stories or more.
28. Section 711.6 - Exception - Fire Dampers are not required at penetrations of tenant separation and corridor walls in buildings equipped with an automatic sprinkler system.
29. Section 715.6 - Lintels that have a span of 6ft. or more shall be fire protected.
30. Table 1011.4 - Corridor fire resistance rating for use groups R-2 and S-2 is 1/2hr. and the total capacity of all exits from the corridor is greater than 10.
31. Section 1011.4.1 - Exception - Tenant and dwelling unit separation walls which are also corridor walls shall not be required to have a fire-resistance greater than that required by Table 1011.4 where the building is equipped with an automatic sprinkler system.
32. Section 1014.11 - Interior exit stairways shall be enclosed with a fire-resistance rating of not less than 2hr.

1 BUILDING CODE REVIEW
SCALE: N.T.S

JC BT ARCHITECT
585 WASHINGTON STREET, QUINCY, MA 02169
ADMIN@JCBTARCHITECT.COM
TEL: (617) 404-8182

CONSULTANT

REGISTRATION

REGISTERED ARCHITECT — JIM CHEN — No. 51071 — QUINCY, MA — COMMONWEALTH OF MASSACHUSETTS

04/01/2020

REVISIONS

NO.	BY	DESCRIPTION	DATE

PROJECT

POND STREET RESIDENCES

12 POND STREET
ASHLAND, MA 01721
JCBT PROJECT # 20007

SHEET TITLE

SYMBOLS & ABBREVIATIONS
BUILDING CODE REVIEW

DRAWN:
SCALE: NOTED
DATE:
CHECKED:
SHEET OF

DRAWING NO:

A-001

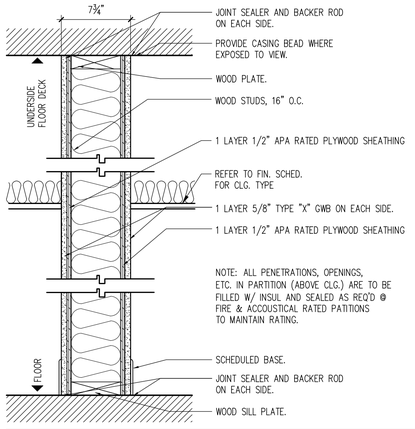

1	1 HR. RATED 2X6 SHEAR WALL PARTITION – U.L. U344 (SIM.)	STC 50
2	W/ MR GWB ON BATH SIDES (2X6)	STC 50

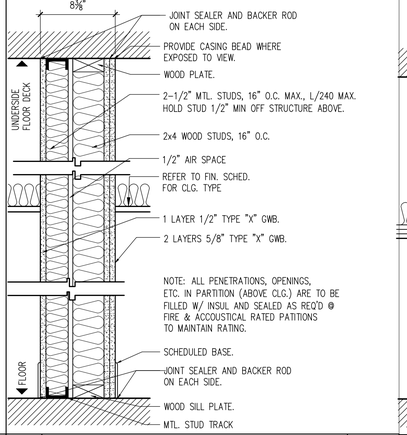

3	1 HR. RATED NON BEARING 2X4 DEMISING WALL PARTITION	STC 65

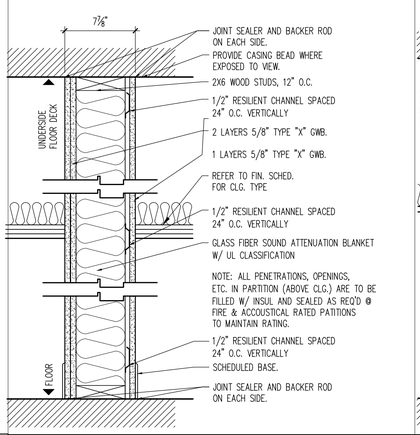

4	1 HR RATED 2X6 BEARING CORRIDOR WALL	STC 50
5	1 HR RATED 2X6 BEARING CORRIDOR WALL W/ MR GWB ON BATH SIDES	STC 50

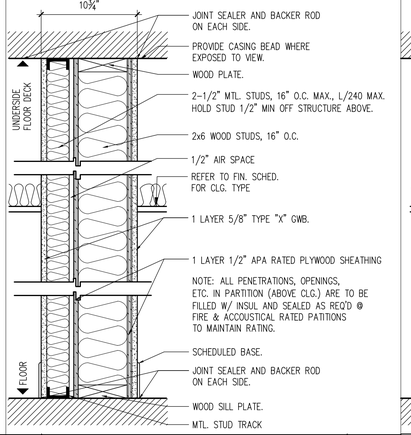

8	1 HR. RATED DEMISING SHEAR WALL PARTITION – U.L. U342 (SIM.)	STC 65
9	1 HR. RATED DEMISING SHEAR WALL W/ MR GWB ON BATH SIDES	STC 65

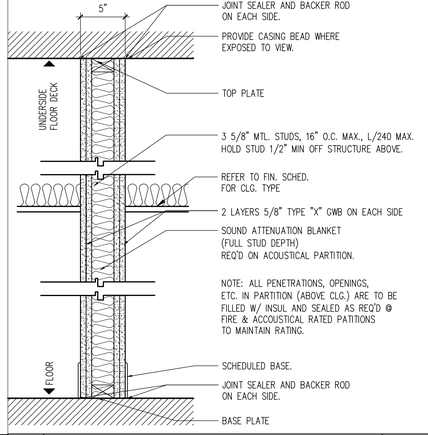

26	2 HR RATED 2 1/2" PARTITON W/ ACOUSTICAL INSULATION – U.L. U412	STC 48
27	W/ MR GWB ON BATH SIDES (3 5/8" MTL. STUD)	STC 56
28	2 HR RATED 3 5/8" PARTITON W/ ACOUSTICAL INSULATION – U.L. U411	STC 50
29	W/ MR GWB ON BATH SIDES (5 1/2" MTL. STUD)	STC 50

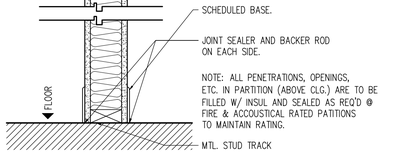

31	1 HR RATED 2x4 STUD W/ ACOUSTICAL INSULATION – U.L. U305	STC 50
32	1 HR RATED 5 1/2" MTL. STUD W/ ACOUSTICAL INSULATION – U.L. U305	STC 50
33	1 HR RATED 5 1/2" MTL. STUD W/ ACOUSTICAL INSULATION & MR GWB ON BATH SIDES	

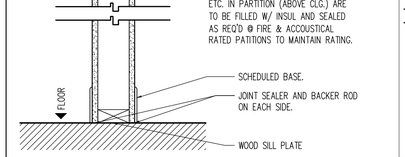

36	NON RATED PARTITION	
37	W/ MR GWB ON BATH SIDES	
38	W/ ACOUSTICAL INSULATION	STC 40
39	W/ ACOUSTICAL INSULATION & MR GWB ON BATH SIDES	STC 40
40	NON-RATED 2X6 PARTITION W/ POCKET DOOR	

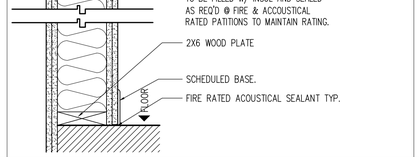

51	2-HR RATED STAIR & ELEVATOR WALL PARTITION – U.L. U529	STC 58

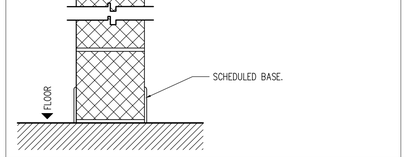

56	2 HR RATED PARTITON – U.L. U906	STC 50

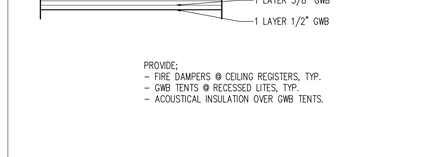

78	1 HR. RATED FLOOR/CEILING – U.L. L550	STC 55

WALL TYPE NOTES:

PARTITION TYPE NOTES:

1. ALL INTERIOR GWB PARTITIONS METAL STUDS (WHERE USED) ARE TO BE GAUGE AS SPECIFIED. SEE DRAWINGS AND SPECIFICATIONS FOR ADDITIONAL NOTES/REQUIREMENTS THAT MAY AFFECT STUD GAUGE.
2. ALL GWB SHALL BE ASTM C36, TYPE X GYPSUM BOARD,UNLESS WALL TYPE UL RATING HAS BEEN BASED ON DIFFERENT PROPRIETARY GYPSUM BOARD.
3. MOISTURE-RESISTANT BOARD TO BE USED AT BATHROOM AND POWDER ROOMS. CEMENTITIOUS BOARD TO BE USED AT ALL TUB AND SHOWER SURROUNDS.
4. SHAFT ASSEMBLIES MUST PROVIDE CONTINUOUS RATING AT FLOOR/CEILING ASSEMBLIES AT ALL FOUR SIDES
5. CORRIDOR AND DEMISING WALLS ARE CONTINUOUS TO UNDERSIDE OF DECKING.

GENERAL NOTES:

1. AT KITCHEN PLUMBING WALLS PROVIDE 6" STUDS THOUGHOUT.
2. PROVIDE PLUMBING WALL AROUND FIRE RATED SHAFTS IN BATHROOMS (AND KITCHENS WHERE NECESSARY). TYP. PLUMBING WALL TO BE 3-1/2" MTL. STUD W/ 5/8 MOISTURE RESISTANT GWB OR CEMENTITIOUS BOARD
3. PROVIDE WOOD WALL BLOCKING OR STRAPPING IN PARTITIONS AS REQUIRED BY THE 521 CMR AAB, SPEC AND/OR DRAWINGS. AT ALL LOCATIONS WHERE REQUIRED INCLUDING, BUT NOT LIMITED TO, CABINETS, SHELVING, COUNTERS, FIXTURES, SHOWER RODS, DOOR TREATMENT, BASE MOULDINGS, CHAIR RAILS, ACCOMMODATIONS FOR ACCESSIBILITY, BATHROOM ACCESSORIES, CLOSET POLES, DOORS, AND MISCELLANEOUS HARDWARE. BLOCKING AT ALL UNITS FOR GROUP 1. AND 2. MAAB ADAPTABILITY STANDARDS.
4. GENERAL CONTRACTOR TO COORDINATE INSRTALLATION WITH SUB- CONTRACTORS AND TO CONFIRM AND DOCUMENT INSTALLATION OF WOOD WALL BLOCKING BEFORE WALL CLOSING.

JCBT ARCHITECT
585 WASHINGTON STREET, QUINCY, MA 02169
ADMIN@JCBTARCHITECT.COM
TEL: (617) 404-8182

CONSULTANT

REGISTRATION

REGISTERED ARCHITECT JIM CHEN No. 51071 QUINCY, MA COMMONWEALTH OF MASSACHUSETTS

04/01/2020

REVISIONS

NO.	BY	DESCRIPTION	DATE

PROJECT

POND STREET RESIDENCES

12 POND STREET
ASHLAND, MA 01721
JCBT PROJECT # 20007

SHEET TITLE

PROPOSED
WALL TYPE SCHEDULES

DRAWN:
SCALE: NOTED
DATE:
CHECKED:
SHEET OF

DRAWING NO:

A-002

COMMERCIAL - 1
1,085 GROSS SQ.FT.

COMMERCIAL - 2
758 GROSS SQ.FT.

MAIN LOBBY

COMMERCIAL - 3
1,151 GROSS SQ.FT.

COMMERCIAL - 4
1,155 GROSS SQ.FT.

HALLWAY

STAIR #1

ELEVATOR

ELEVATOR MACHINE ROOM

VAN ACCESSIBLE

STORAGE

HALLWAY

STAIR #2

GARAGE
(2) H.C. PARKING
(15) STACKED PARKING (30)
32 PARKING SPACE

STACKED PARKING

FIRE SPRINKLER ROOM

BIKE ROOM

ELECTRICAL ROOM
17'-4"

1 PROPOSED GARAGE / FIRST FLOOR PLAN
SCALE: 3/16" = 1'-0"

JCBT
ARCHITECT
585 WASHINGTON STREET, QUINCY, MA 02169
ADMIN@JCBTARCHITECT.COM
TEL: (617) 404-8182

CONSULTANT

REGISTRATION

JIM CHEN
No. 51071
QUINCY, MA
REGISTERED ARCHITECT
04/01/2020

REVISIONS

NO.	BY	DESCRIPTION	DATE

PROJECT

POND STREET RESIDENCES

12 POND STREET
ASHLAND, MA 01721
JCBT PROJECT # 20007

SHEET TITLE
GARAGE/FIRST FLOOR PLAN

DRAWN:
SCALE: NOTED
DATE:
CHECKED:
SHEET OF

DRAWING NO:
A-101

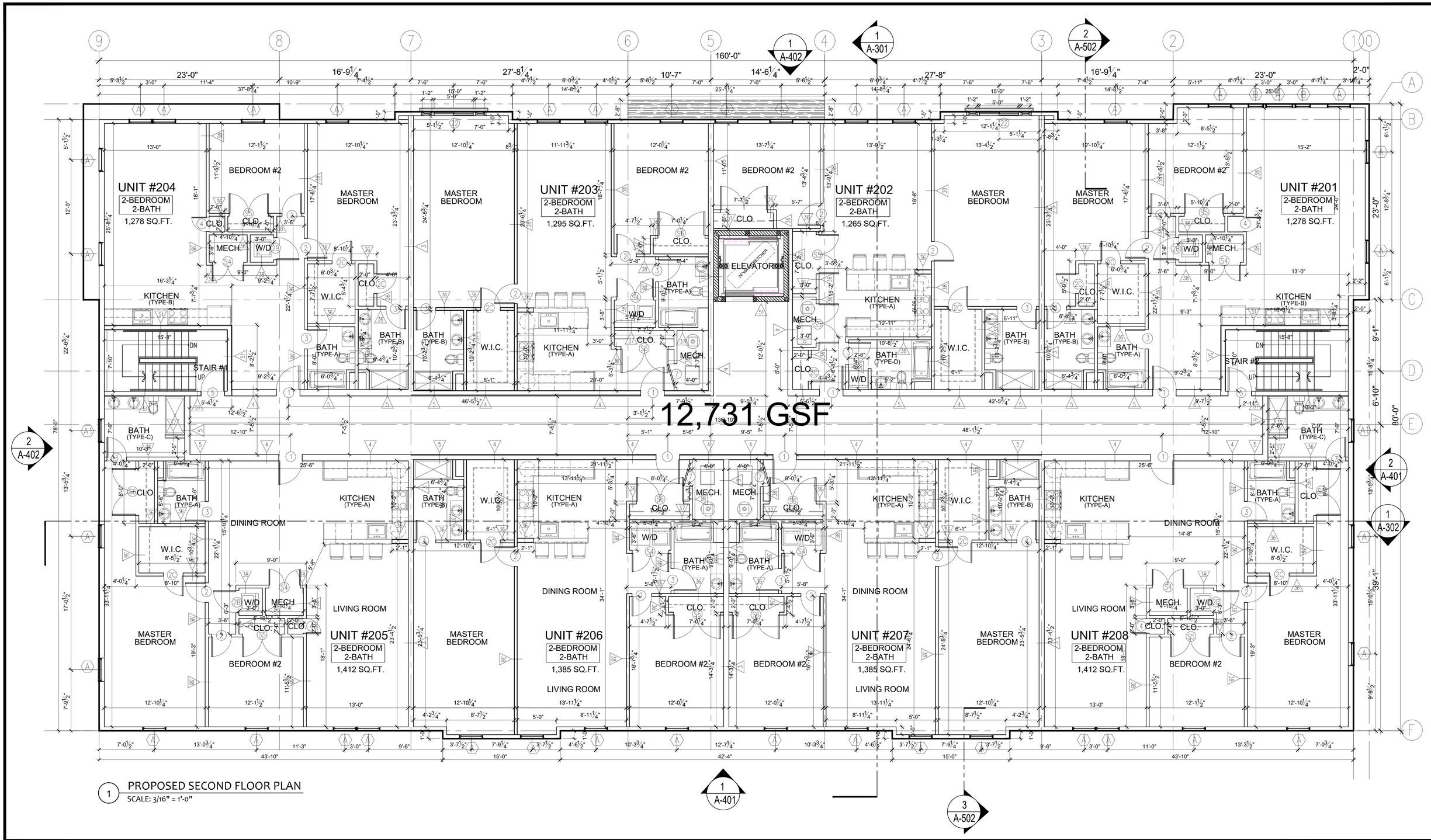

1 PROPOSED SECOND FLOOR PLAN

SCALE: 3/16" = 1'-0"

JC BT ARCHITECT

585 WASHINGTON STREET, QUINCY, MA 02169
ADMIN@JCBTARCHITECT.COM
TEL: (617) 404-8182

CONSULTANT

REGISTRATION

JIM CHEN REGISTERED ARCHITECT No. 51071 QUINCY, MA COMMONWEALTH OF MASSACHUSETTS

04/01/2020

REVISIONS

NO.	BY	DESCRIPTION	DATE

PROJECT

POND STREET RESIDENCES

12 POND STREET
ASHLAND, MA 01721

JCBT PROJECT # 20007

SHEET TITLE

PROPOSED SECOND FLOOR PLAN

DRAWN:	
SCALE:	NOTED
DATE:	
CHECKED:	
SHEET OF	

DRAWING NO: A-102

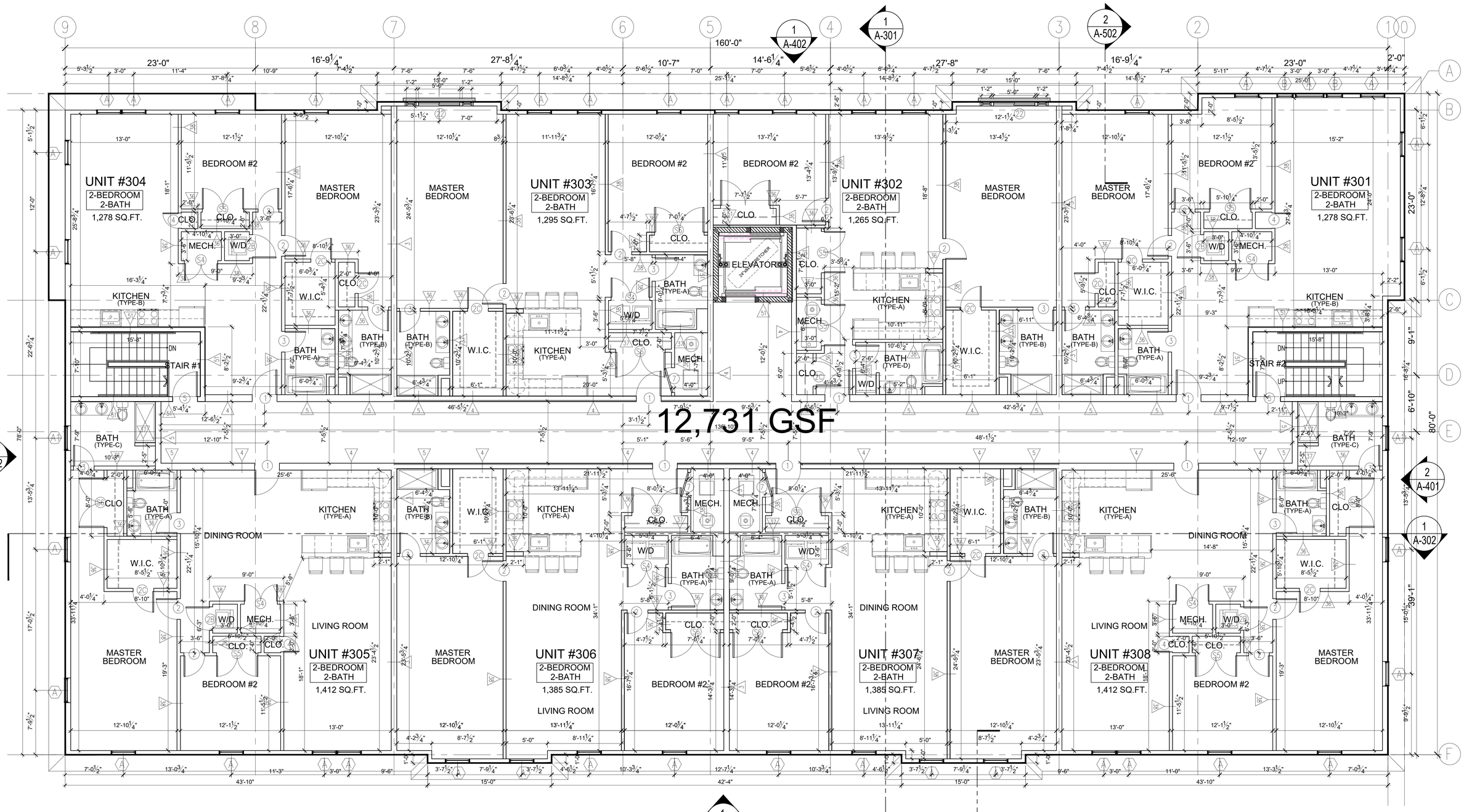

1 PROPOSED THIRD FLOOR PLAN

SCALE: 3/16" = 1'-0"

JCBT ARCHITECT

585 WASHINGTON STREET, QUINCY, MA 02169
ADMIN@JCBTARCHITECT.COM
TEL: (617) 404-8182

CONSULTANT

REGISTRATION

REGISTERED ARCHITECT JIM CHEN No. 51071 QUINCY, MA

04/01/2020

REVISIONS

NO.	BY	DESCRIPTION	DATE

PROJECT

POND STREET RESIDENCES

12 POND STREET
ASHLAND, MA 01721

JCBT PROJECT # 20007

SHEET TITLE

PROPOSED THIRD FLOOR PLAN

DRAWN:	
SCALE:	NOTED
DATE:	
CHECKED:	
SHEET OF	

DRAWING NO:

A-103

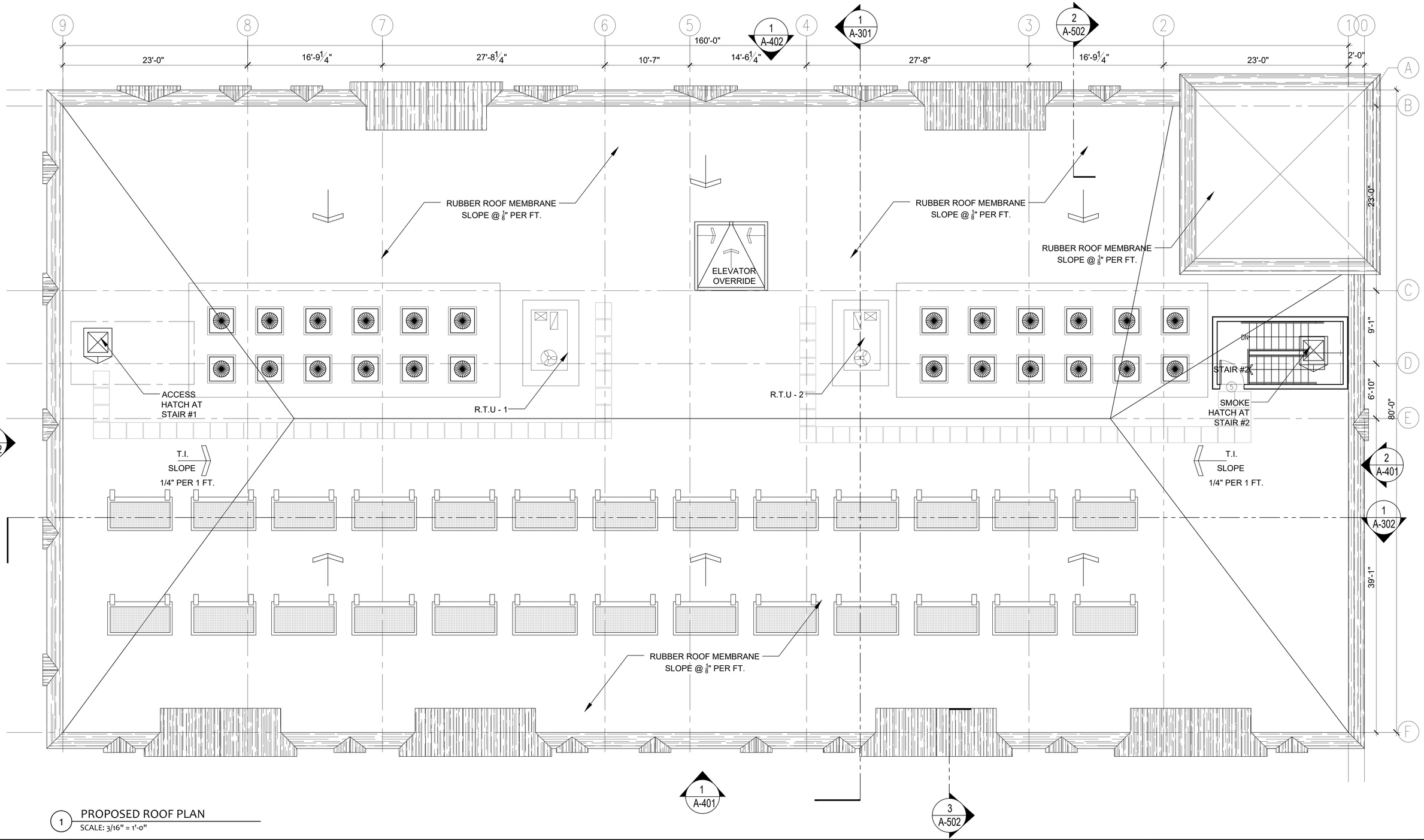

1 PROPOSED ROOF PLAN
SCALE: 3/16" = 1'-0"

JCBT ARCHITECT
585 WASHINGTON STREET, QUINCY, MA 02169
ADMIN@JCBTARCHITECT.COM
TEL: (617) 404-8182

CONSULTANT

REGISTRATION

REGISTERED ARCHITECT JIM CHEN No. 51071 QUINCY, MA COMMONWEALTH OF MASSACHUSETTS

04/01/2020

REVISIONS

NO.	BY	DESCRIPTION	DATE

PROJECT

POND STREET RESIDENCES

12 POND STREET
ASHLAND, MA 01721
JCBT PROJECT # 20007

SHEET TITLE
PROPOSED ROOF PLAN

DRAWN:	DRAWING NO:
SCALE: NOTED	
DATE:	
CHECKED:	
SHEET OF	A-104

◦ 2" APERTURE DOWNLIGHT	✧ WALL SCONCE	4' RECESSED LIGHT FIXTURE	2X2 SUPPLY DIFFUSER
○ 4" APERTURE DOWNLIGHT	• SPRINKLER HEAD	PENDANT LIGHT FIXTURE	2X2 RETURN AIR GRILL
2X2 LIGHT SURFACE MOUNT	⊗ SPEAKER	RAILING LIGHT FIXTURE	

G.W.B. CEILING

EXPOSED CEILING

2X4 CONCEALED GRID A.C.T. CEILING

EXTERIOR GRADE SOFFIT BOARD

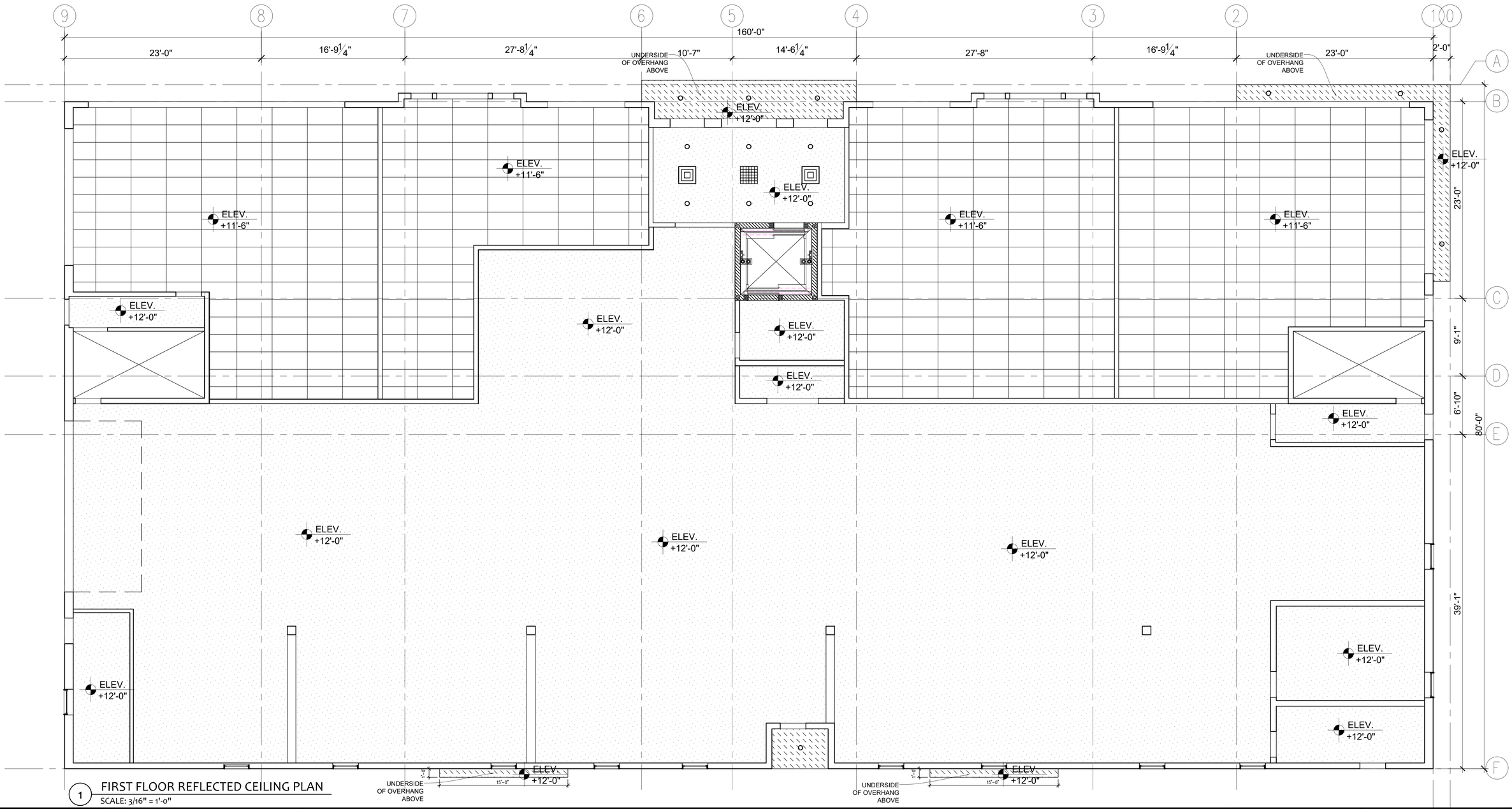

1 FIRST FLOOR REFLECTED CEILING PLAN

SCALE: 3/16" = 1'-0"

JCBT ARCHITECT

585 WASHINGTON STREET, QUINCY, MA 02169

ADMIN@JCBTARCHITECT.COM

TEL: (617) 404-8182

CONSULTANT

REGISTRATION

REGISTERED ARCHITECT JIM CHEN No. 51071 QUINCY, MA

04/01/2020

REVISIONS

NO.	BY	DESCRIPTION	DATE

PROJECT

POND STREET RESIDENCES

12 POND STREET

ASHLAND, MA 01721

JCBT PROJECT # 20007

SHEET TITLE

GARAGE/FIRST REFLECTIVE CEILING PLAN

DRAWN:

SCALE: NOTED

DATE:

CHECKED:

SHEET OF

DRAWING NO:

A-201

2" APERTURE DOWNLIGHT	WALL SCONCE	4' RECESSED LIGHT FIXTURE	2X2 SUPPLY DIFFUSER
4" APERTURE DOWNLIGHT	SPRINKLER HEAD	PENDANT LIGHT FIXTURE	2X2 RETURN AIR GRILL
2X2 LIGHT SURFACE MOUNT	SPEAKER	RAILING LIGHT FIXTURE	

G.W.B. CEILING

EXPOSED CEILING

2X4 CONCEALED GRID A.C.T. CEILING

EXTERIOR GRADE SOFFIT BOARD

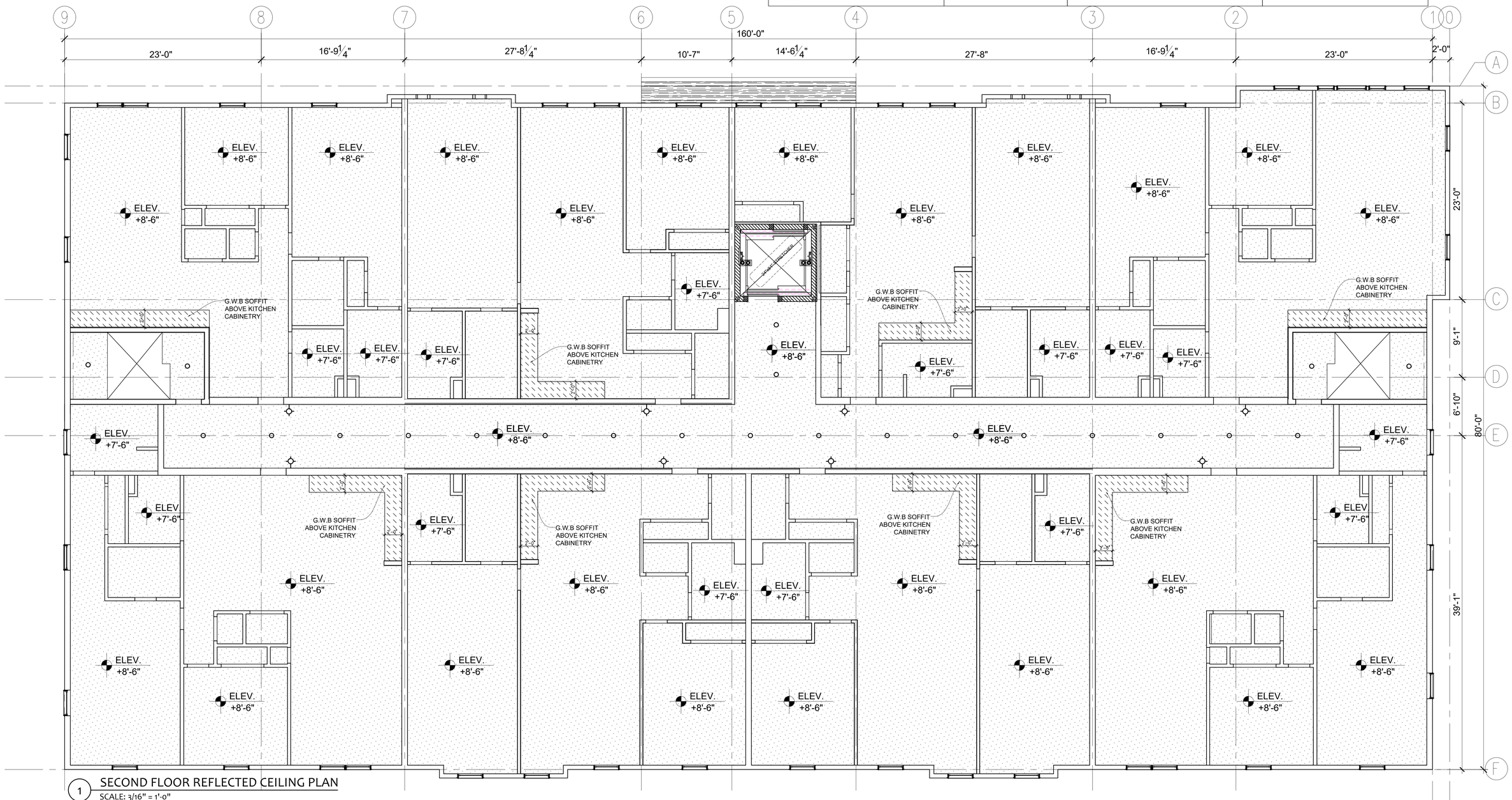

1 SECOND FLOOR REFLECTED CEILING PLAN

SCALE: 3/16" = 1'-0"

JC BT ARCHITECT

585 WASHINGTON STREET, QUINCY, MA 02169

ADMIN@JCBTARCHITECT.COM

TEL: (617) 404-8182

CONSULTANT

REGISTRATION

JIM CHEN REGISTERED ARCHITECT No. 51071 QUINCY, MA COMMONWEALTH OF MASSACHUSETTS

04/01/2020

REVISIONS

NO.	BY	DESCRIPTION	DATE

PROJECT

POND STREET RESIDENCES

12 POND STREET

ASHLAND, MA 01721

JCBT PROJECT # 20007

SHEET TITLE

SECOND FLOOR REFLECTIVE CEILING PLAN

DRAWN:

SCALE: NOTED

DATE:

CHECKED:

SHEET OF

DRAWING NO:

A-202

◦ 2" APERTURE DOWNLIGHT	✧ WALL SCONCE	4' RECESSED LIGHT FIXTURE	2X2 SUPPLY DIFFUSER
○ 4" APERTURE DOWNLIGHT	• SPRINKLER HEAD	PENDANT LIGHT FIXTURE	2X2 RETURN AIR GRILL
2X2 LIGHT SURFACE MOUNT	⊗ SPEAKER	RAILING LIGHT FIXTURE	

G.W.B. CEILING

EXPOSED CEILING

2X4 CONCEALED GRID A.C.T. CEILING

EXTERIOR GRADE SOFFIT BOARD

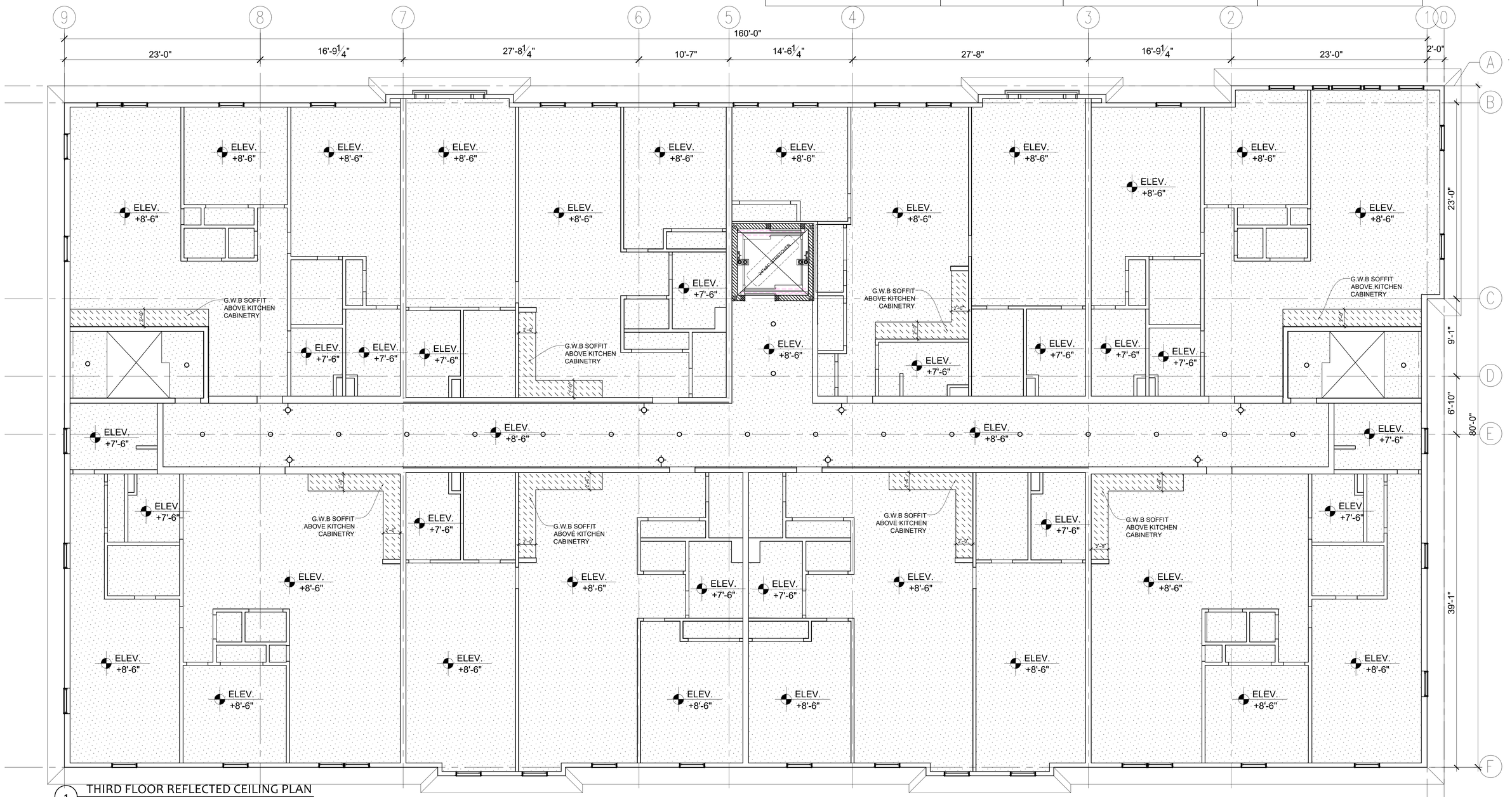

1 THIRD FLOOR REFLECTED CEILING PLAN

SCALE: 3/16" = 1'-0"

JCBT ARCHITECT

585 WASHINGTON STREET, QUINCY, MA 02169

ADMIN@JCBTARCHITECT.COM

TEL: (617) 404-8182

CONSULTANT

REGISTRATION

REGISTERED ARCHITECT JIM CHEN No. 51071 QUINCY, MA

04/01/2020

REVISIONS

NO.	BY	DESCRIPTION	DATE

PROJECT

POND STREET RESIDENCES

12 POND STREET

ASHLAND, MA 01721

JCBT PROJECT # 20007

SHEET TITLE

THIRD FLOOR REFLECTIVE CEILING PLAN

DRAWN:

SCALE: NOTED

DATE:

CHECKED:

SHEET OF

DRAWING NO: A-203

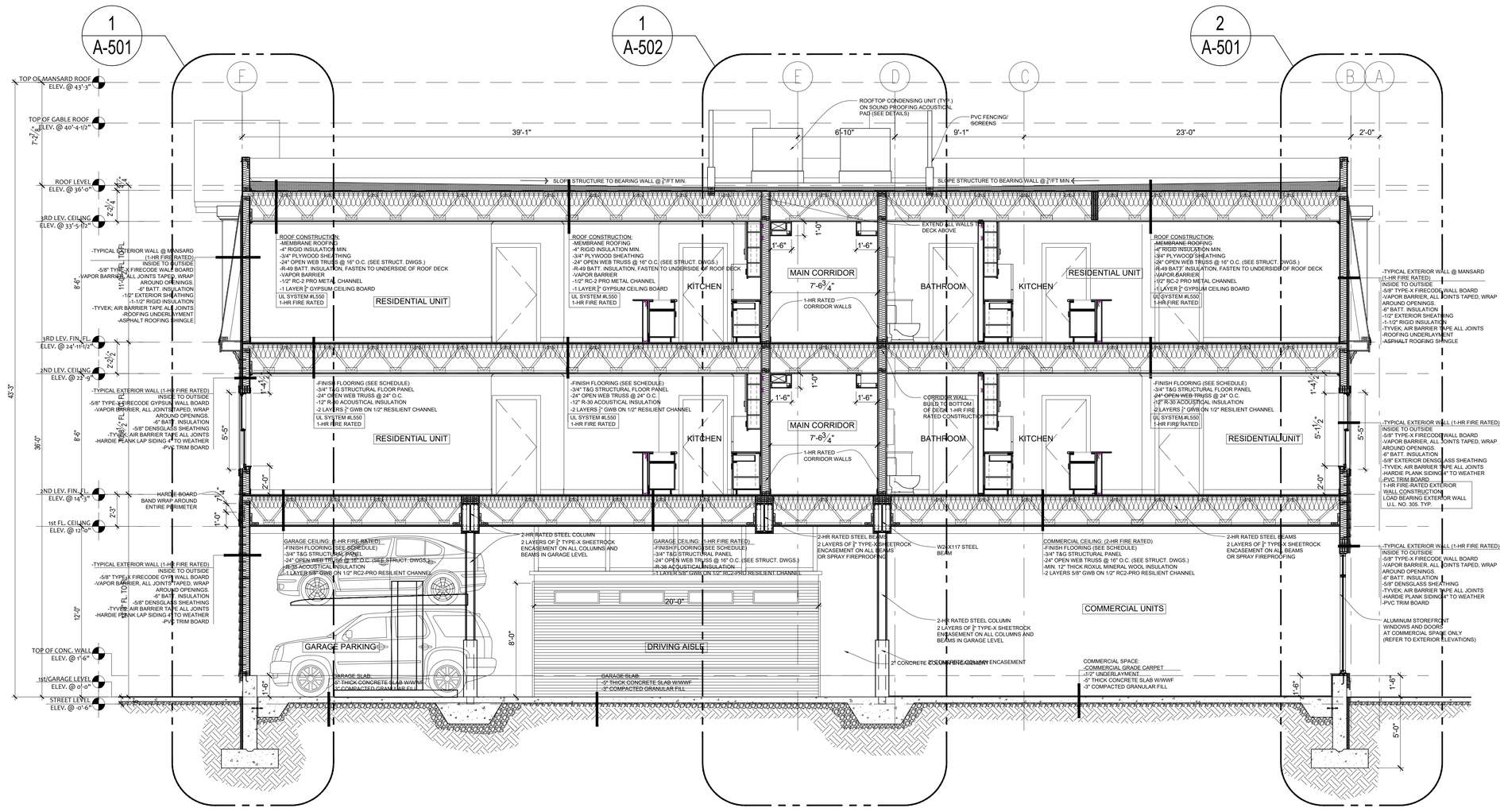

1 BUILDING SECTION
SCALE: 1/4" = 1'-0"

JC BT
ARCHITECT
585 WASHINGTON STREET, QUINCY, MA 02169
ADMIN@JCBTARCHITECT.COM
TEL: (617) 404-8182

CONSULTANT

REGISTRATION

REGISTERED ARCHITECT
JIM CHEN
No. 51071
QUINCY, MA

04/01/2020

REVISIONS

NO.	BY	DESCRIPTION	DATE

PROJECT

POND STREET RESIDENCES

12 POND STREET
ASHLAND, MA 01721
JCBT PROJECT # 20007

SHEET TITLE

PROPOSED BUILDING SECTION

DRAWN:	
SCALE:	NOTED
DATE:	
CHECKED:	
SHEET OF	

DRAWING NO:

A-301

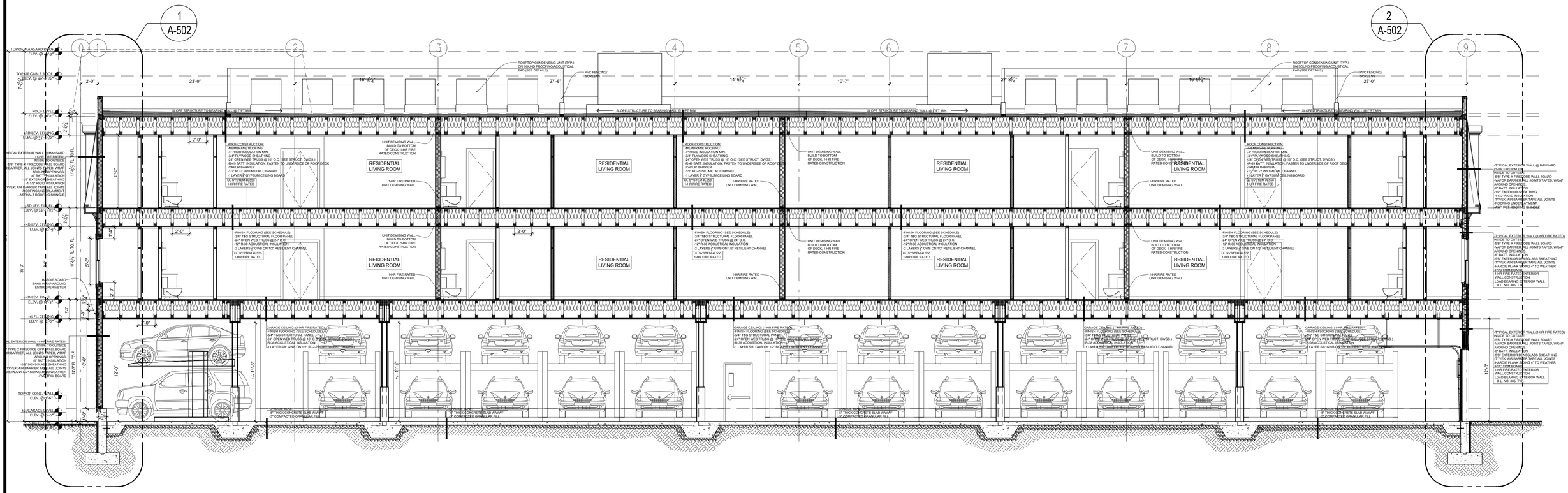

1 LONGITUNDINAL BUILDING SECTION
SCALE: 3/16" = 1'-0"

JC BT
ARCHITECT
585 WASHINGTON STREET, QUINCY, MA 02169
ADMIN•JCBTARCHITECT.COM
TEL: (617) 404-8182

CONSULTANT

REGISTRATION

REGISTERED ARCHITECT JIM CHEN No. 51071 QUINCY, MA COMMONWEALTH OF MASSACHUSETTS

04/01/2020

REVISIONS

NO.	BY	DESCRIPTION	DATE

PROJECT

POND STREET RESIDENCES

12 POND STREET
ASHLAND, MA 01721
JCBT PROJECT # 20007

SHEET TITLE

PROPOSED BUILDING LONGITUNDINAL SECTION

DRAWN:
SCALE: NOTED
DATE:
CHECKED:
SHEET OF

DRAWING NO:
A-302



1 PROPOSED POND STREET ELEVATION
3/16" = 1'-0"

2 PROPOSED GREENHALGE ROAD ELEVATION
SCALE: 3/16" = 1'-0"

JCBT
ARCHITECT
585 WASHINGTON STREET, QUINCY, MA 02169
ADMIN@JCBTARCHITECT.COM
TEL: (617) 404-8182

CONSULTANT

REGISTRATION

JIM CHEN
No. 51071
QUINCY, MA
REGISTERED ARCHITECT
04/01/2020

REVISIONS

NO.	BY	DESCRIPTION	DATE

PROJECT

POND STREET RESIDENCES

12 POND STREET
ASHLAND, MA 01721
JCBT PROJECT # 20007

SHEET TITLE

PROPOSED EXTERIOR ELEVATIONS

DRAWN:	DRAWING NO:
SCALE: NOTED	A-401
DATE:	
CHECKED:	
SHEET OF	

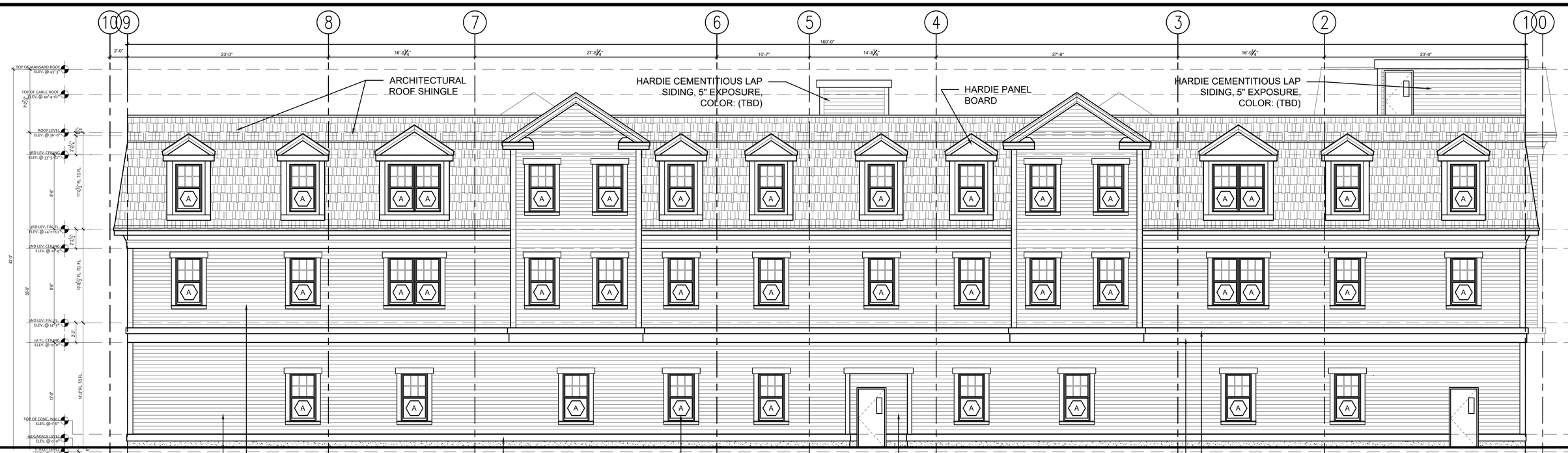

1 PROPOSED REAR BUILDING ELEVATION
3/16" = 1'-0"



2 PROPOSED DOUGLAS ROAD ELEVATION
SCALE: 3/16" = 1'-0"

JCBT ARCHITECT
585 WASHINGTON STREET, QUINCY, MA 02169
ADMIN@JCBTARCHITECT.COM
TEL: (617) 404-8182

CONSULTANT

REGISTRATION

JIM CHEN
REGISTERED ARCHITECT
No. 51071
QUINCY, MA
COMMONWEALTH OF MASSACHUSETTS
04/01/2020

REVISIONS

NO.	BY	DESCRIPTION	DATE

PROJECT

POND STREET RESIDENCES

12 POND STREET
ASHLAND, MA 01721
JCBT PROJECT # 20007

SHEET TITLE
PROPOSED EXTERIOR ELEVATIONS

DRAWN:
SCALE: NOTED
DATE:
CHECKED:
SHEET OF

DRAWING NO:
A-402

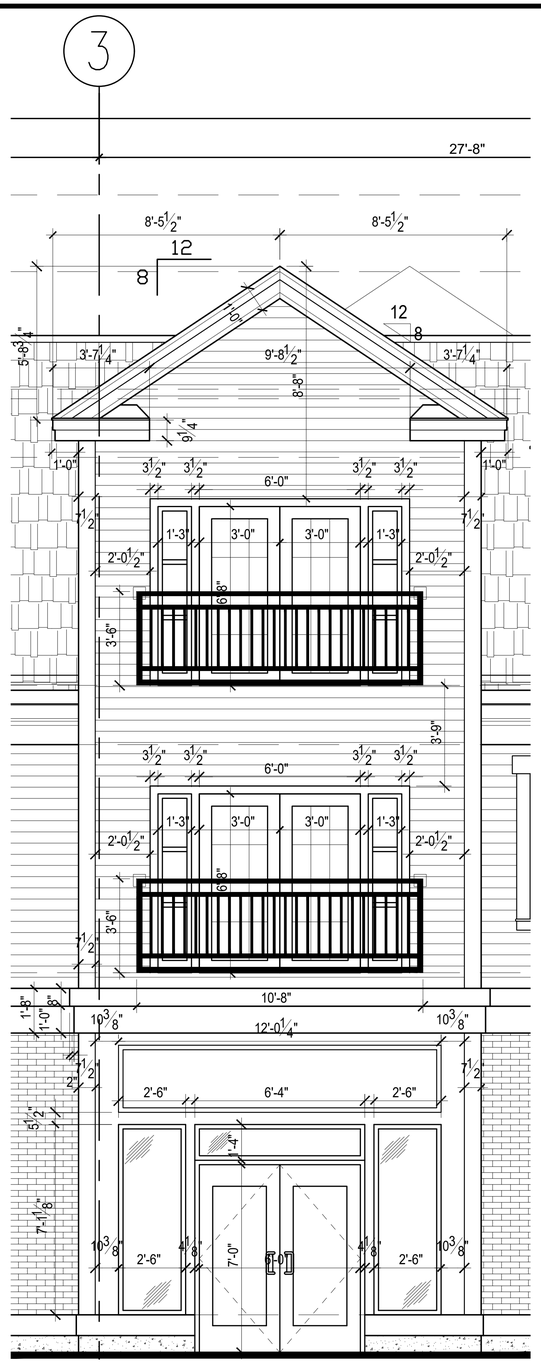

1 ENLARGED PARTIAL ELEVATION @ BUMP-OUT
3/8" = 1'-0"

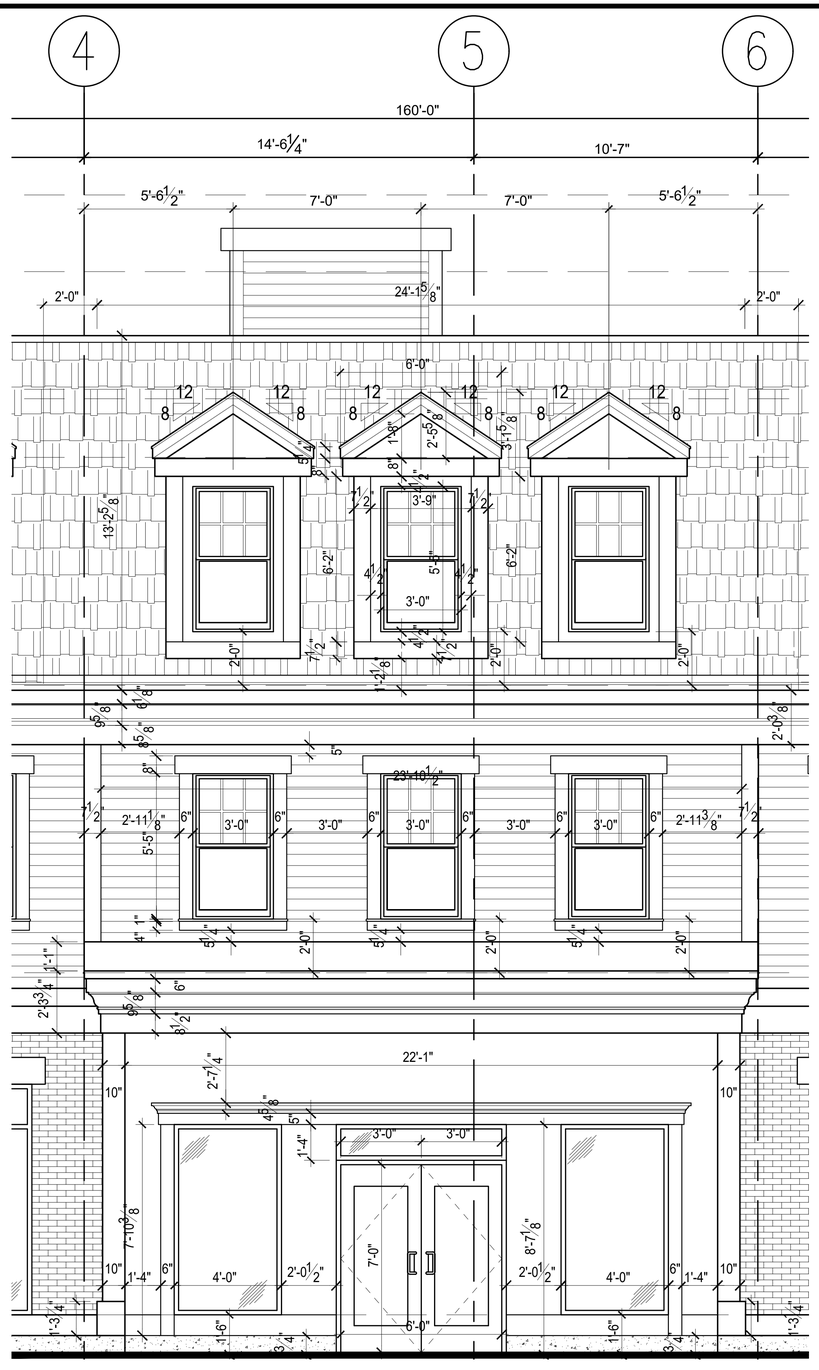

2 ENLARGED PARTIAL ELEVATION @ MAIN ENTRANCE
3/8" = 1'-0"

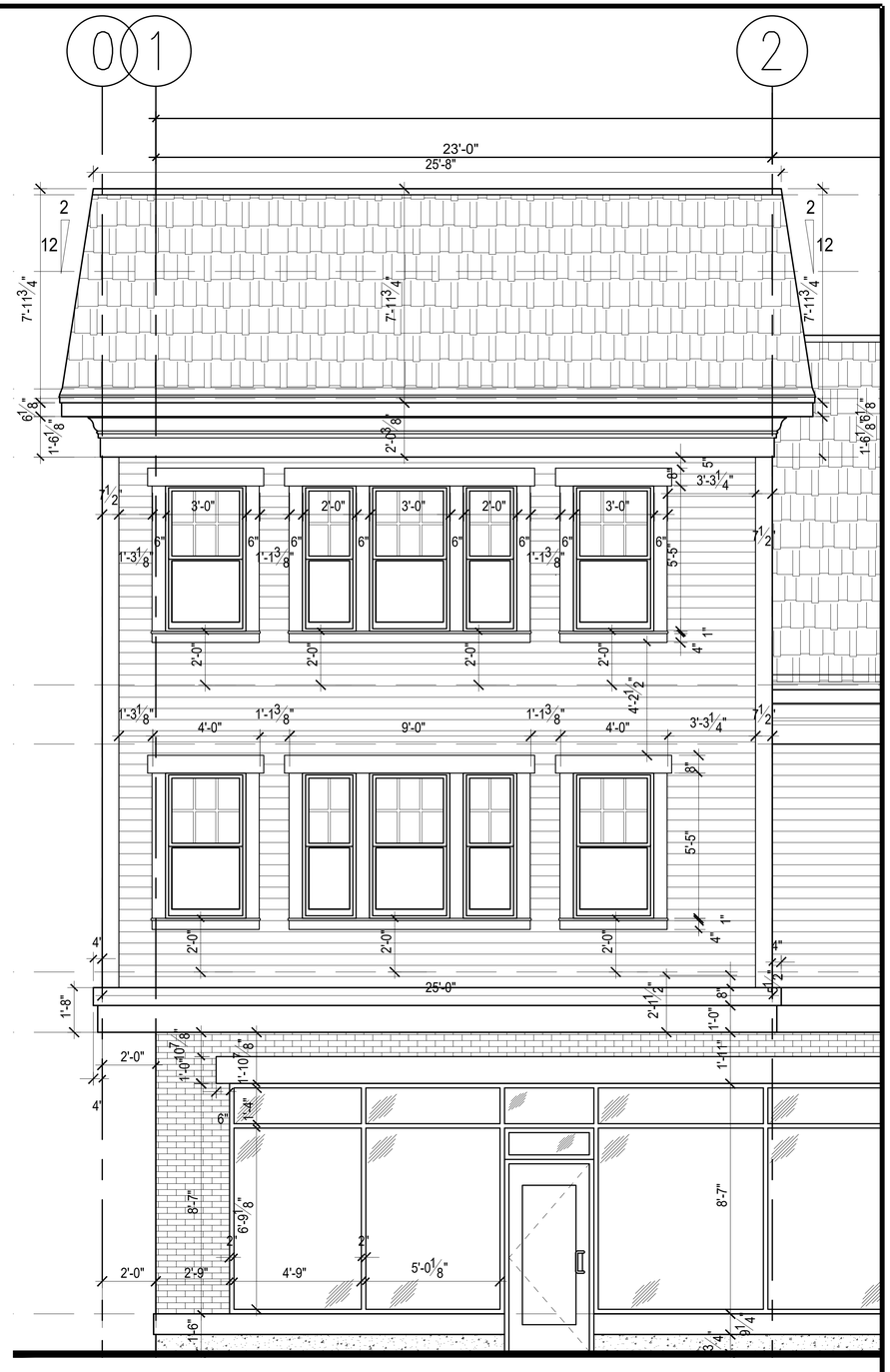

3 ENLARGED PARTIAL ELEVATION @ TOWER
3/8" = 1'-0"

JCBT
ARCHITECT
585 WASHINGTON STREET, QUINCY, MA 02169
ADMIN@JCBTARCHITECT.COM
TEL: (617) 404-8182

CONSULTANT

REGISTRATION

REGISTERED ARCHITECT
JIM CHEN
No. 51071
QUINCY, MA
COMMONWEALTH OF MASSACHUSETTS

04/01/2020

REVISIONS

NO.	BY	DESCRIPTION	DATE

PROJECT

POND STREET RESIDENCES

12 POND STREET
ASHLAND, MA 01721
JCBT PROJECT # 20007

SHEET TITLE
ENLARGED EXTERIOR ELEVATIONS

DRAWN:	DRAWING NO:
SCALE: NOTED	
DATE:	
CHECKED:	A-403
SHEET OF	

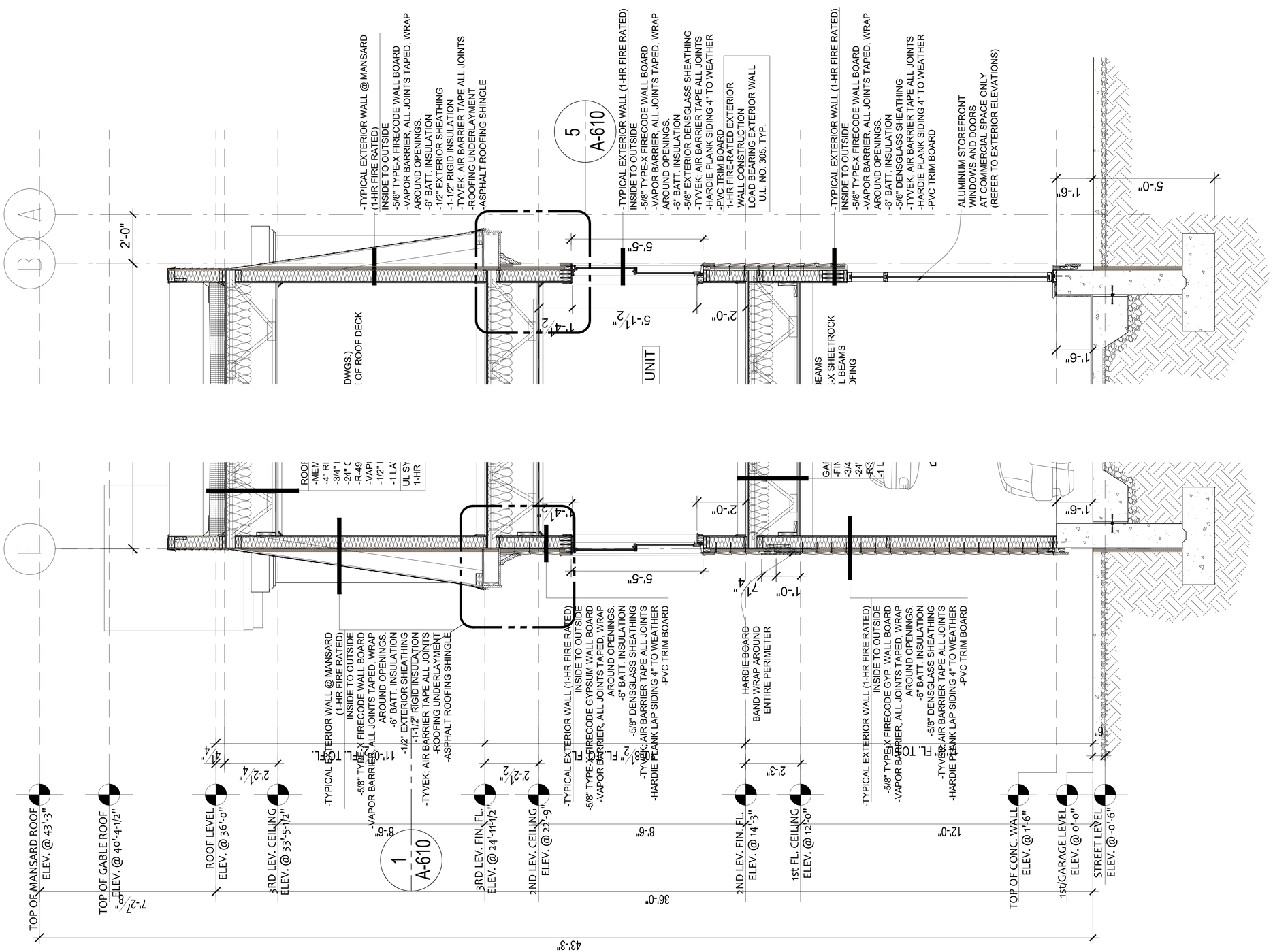

2 TYPICAL WALL SECTION
SCALE: 1/2" = 1'-0"

1 TYPICAL WALL SECTION
SCALE: 1/2" = 1'-0"

JC BT
ARCHITECT
585 WASHINGTON STREET, QUINCY, MA 02169
ADMIN@JCBTARCHITECT.COM
TEL: (617) 404-8182

CONSULTANT

REGISTRATION

REGISTERED ARCHITECT
JIM CHEN
No. 51071
QUINCY, MA
04/01/2020

REVISIONS			
NO.	BY	DESCRIPTION	DATE

PROJECT

POND STREET RESIDENCES

12 POND STREET
ASHLAND, MA 01721
JCBT PROJECT # 20007

SHEET TITLE
PROPOSED WALL SECTIONS

DRAWN:
SCALE: NOTED
DATE:
CHECKED:
SHEET OF

DRAWING NO:
A-501

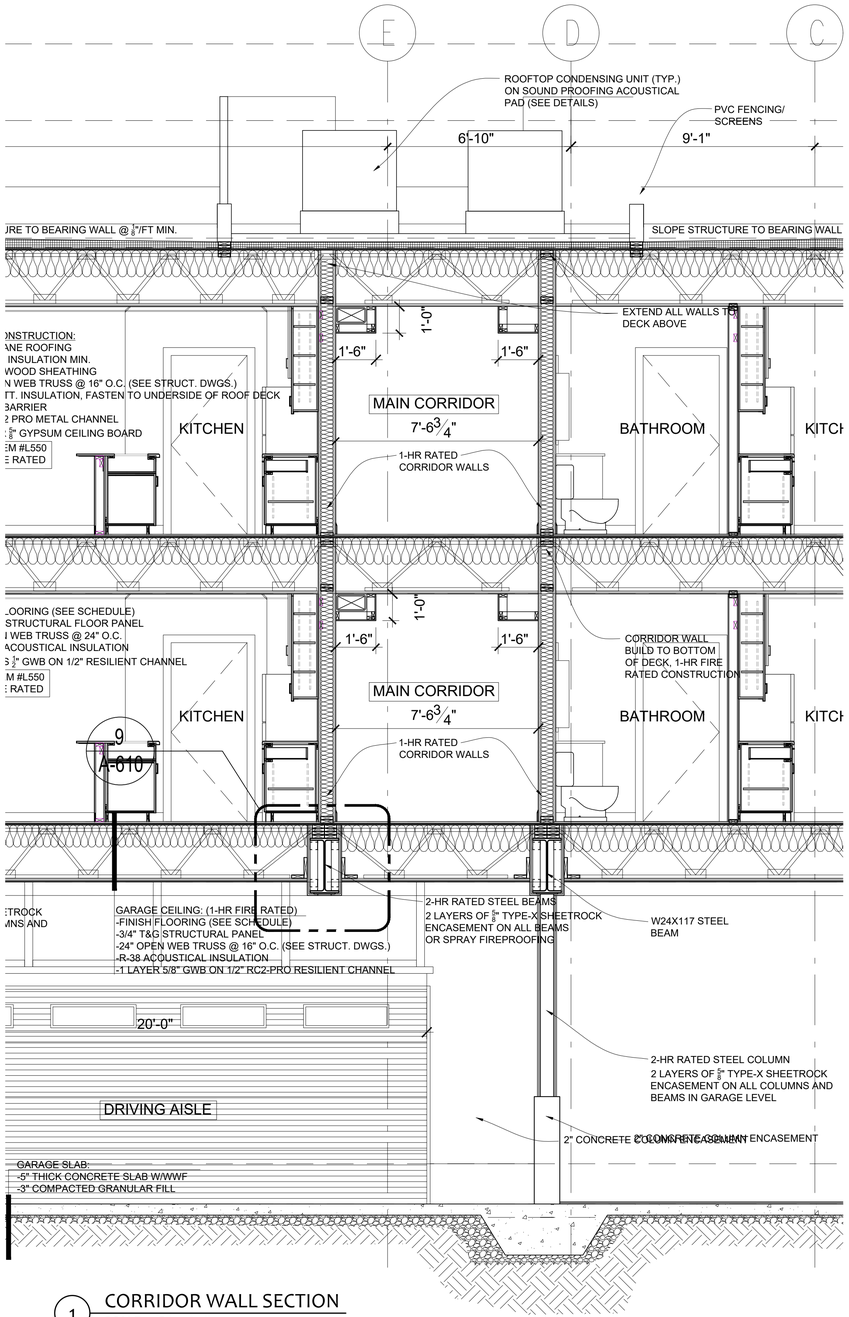

1 CORRIDOR WALL SECTION
SCALE: 3/8" = 1'-0"

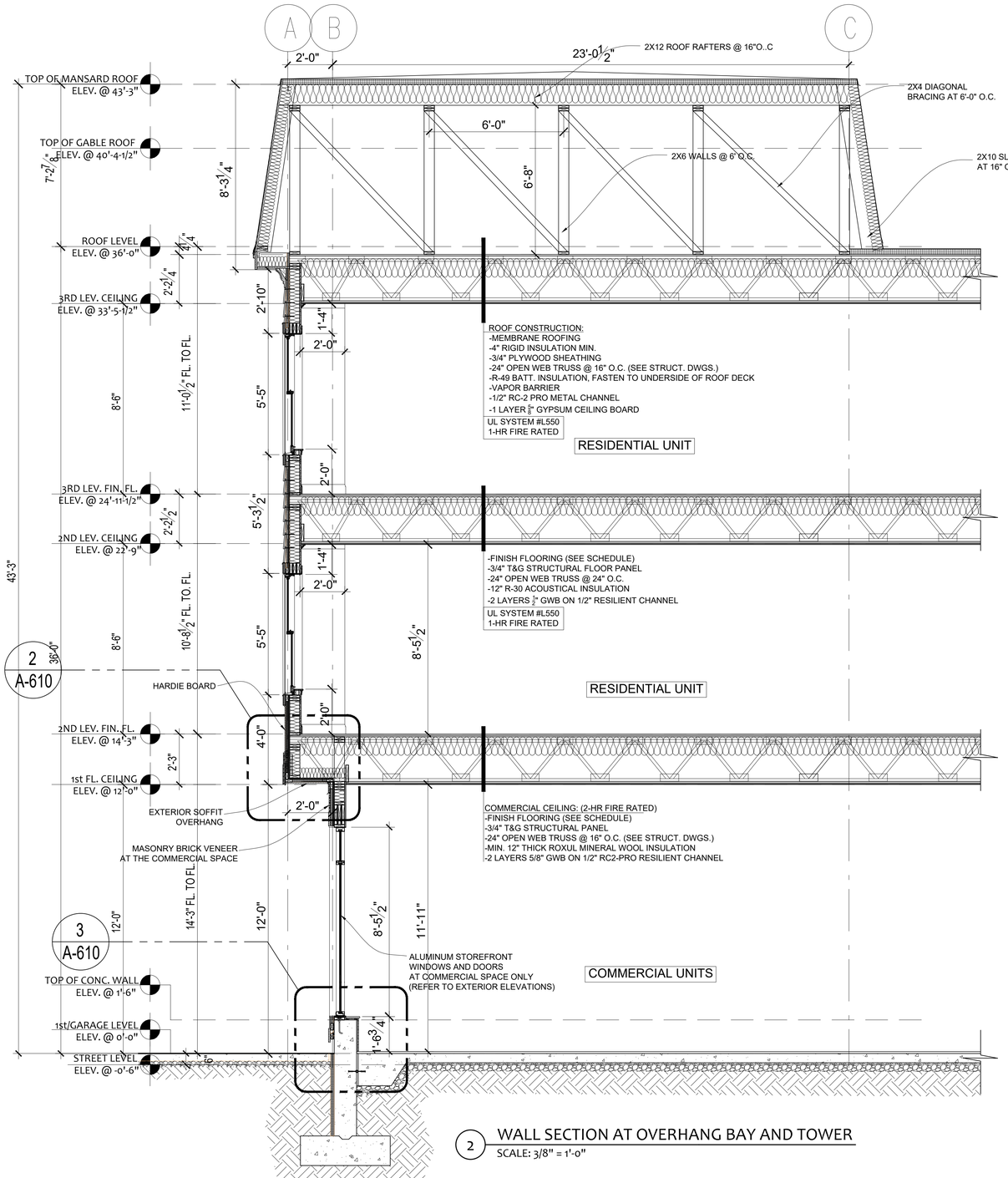

2 WALL SECTION AT OVERHANG BAY AND TOWER
SCALE: 3/8" = 1'-0"

JCBT
ARCHITECT
585 WASHINGTON STREET, QUINCY, MA 02169
ADMIN@JCBTARCHITECT.COM
TEL: (617) 404-8182

CONSULTANT

REGISTRATION

JIM CHEN
No. 51071
QUINCY, MA
REGISTERED ARCHITECT
04/01/2020

REVISIONS

NO.	BY	DESCRIPTION	DATE

PROJECT

POND STREET RESIDENCES

12 POND STREET
ASHLAND, MA 01721
JCBT PROJECT # 20007

SHEET TITLE
BUILDING WALL SECTION

DRAWN:	DRAWING NO:
SCALE: NOTED	A-502
DATE:	
CHECKED:	
SHEET OF	

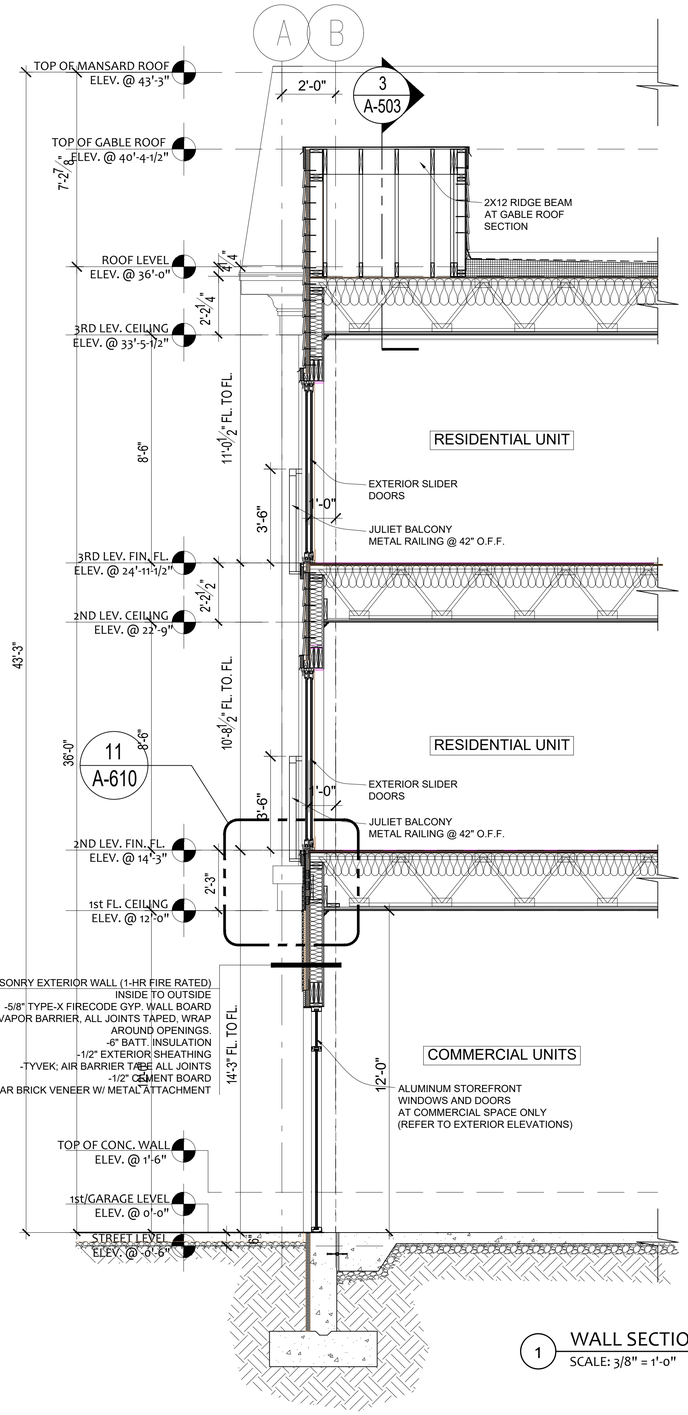

1 WALL SECTION @ BUMP-OUT GABLE ROOF
SCALE: 3/8" = 1'-0"

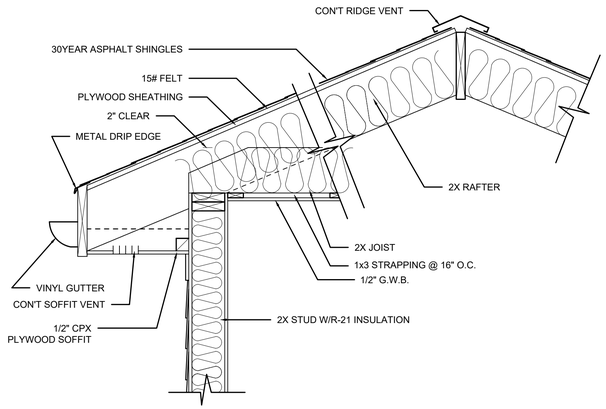

3 GABLE ROOF RIDGE VENT DETAIL
SCALE: 3/8" = 1'-0"

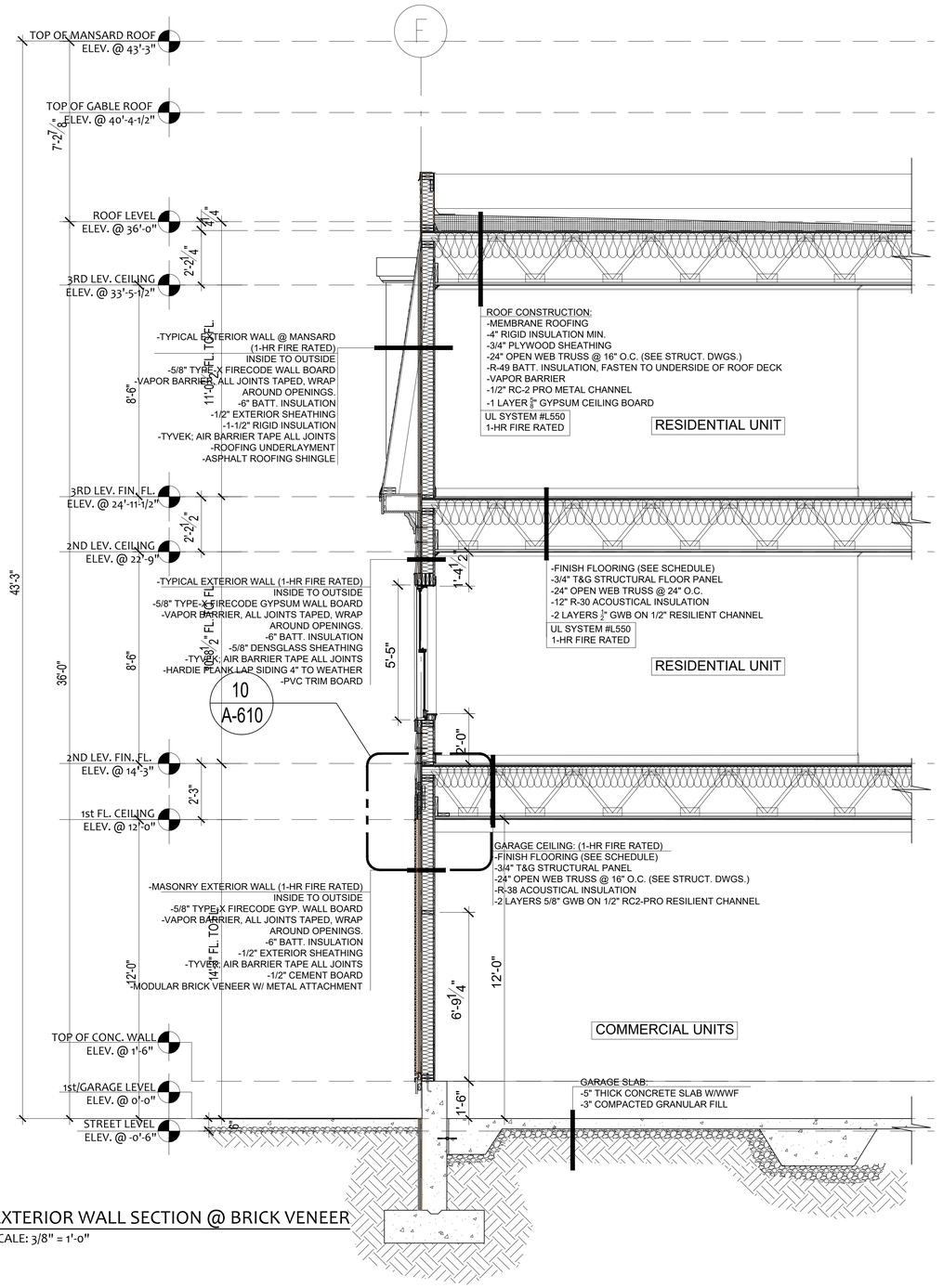

2 EXTERIOR WALL SECTION @ BRICK VENEER
SCALE: 3/8" = 1'-0"

JC BT
ARCHITECT
585 WASHINGTON STREET, QUINCY, MA 02169
ADMIN@JCBTARCHITECT.COM
TEL: (617) 404-8182

CONSULTANT

REGISTRATION

COMMONWEALTH OF MASSACHUSETTS REGISTERED ARCHITECT JIM CHEN No. 51071 QUINCY, MA
04/01/2020

REVISIONS

NO.	BY	DESCRIPTION	DATE

PROJECT

POND STREET RESIDENCES

12 POND STREET
ASHLAND, MA 01721
JCBT PROJECT # 20007

SHEET TITLE
BUILDING WALL SECTIONS

DRAWN:	
SCALE:	NOTED
DATE:	
CHECKED:	
SHEET OF	

DRAWING NO:
A-503

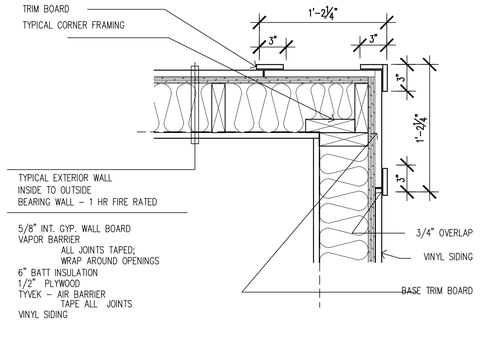

1 PLAN DETAIL
1 1/2" = 1'-0"

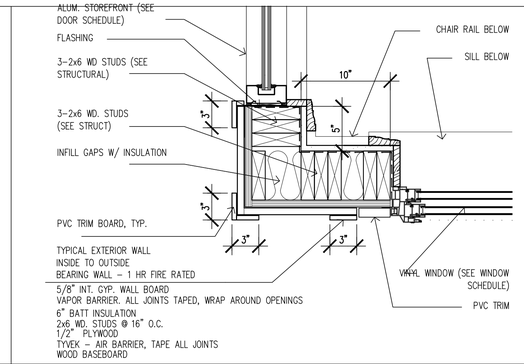

4 PLAN DETAIL @ FRONT ENTRY
1 1/2" = 1'-0"

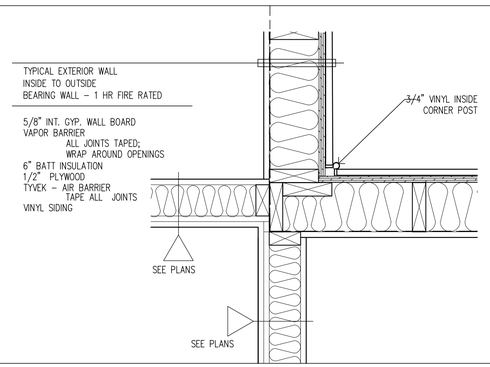

2 PLAN DETAIL
1 1/2" = 1'-0"

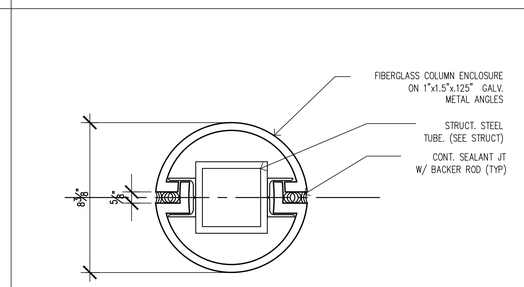

5 COLUMN ENCLOSURE DETAIL
3" = 1'-0"

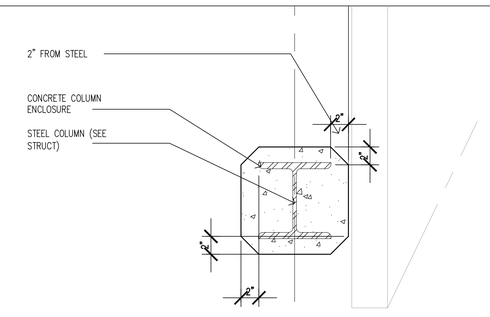

3 COLUMN DETAIL
1 1/2" = 1'-0"

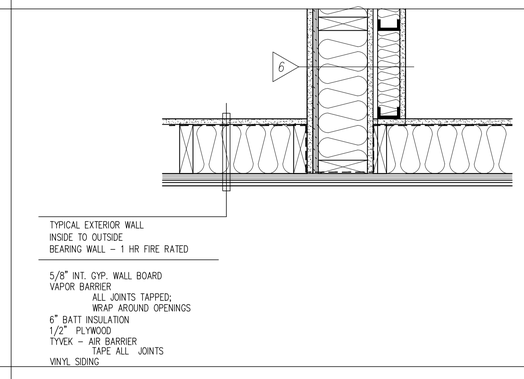

6 DEMISING WALL @ EXTERIOR WALL
1 1/2" = 1'-0"

7 NOT USED
N.T.S.

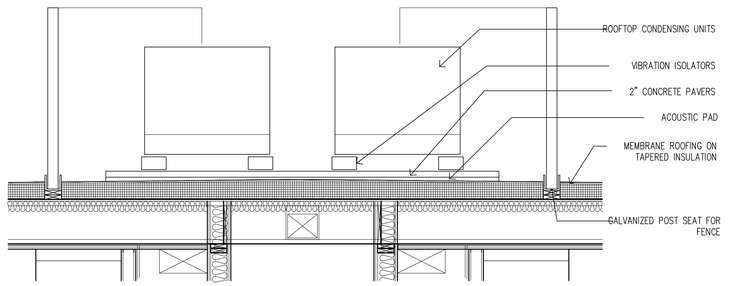

8 ROOF TOP UNITS PAD DETAIL
1/2" = 1'-0"

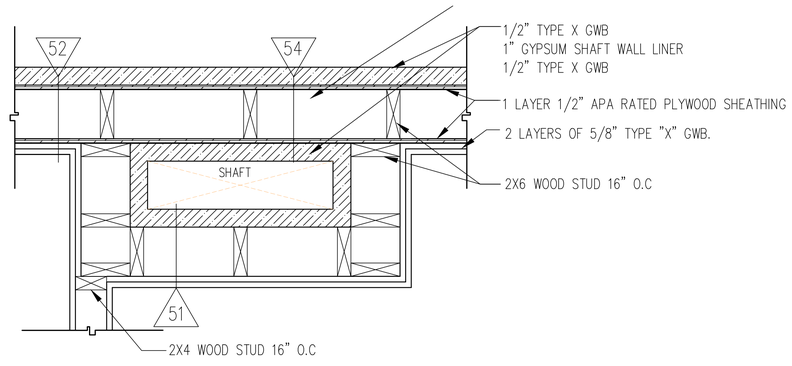

9 BATHROOM SHAFT @ STAIR 1 DEMISING WALL DETAIL
1-1/2" = 1'-0"

JCBT ARCHITECT
585 WASHINGTON STREET, QUINCY, MA 02169
ADMIN@JCBTARCHITECT.COM
TEL: (617) 404-8182

CONSULTANT

REGISTRATION

COMMONWEALTH OF MASSACHUSETTS REGISTERED ARCHITECT TIM CHEN No. 51071 QUINCY, MA
04/01/2020

REVISIONS

NO.	BY	DESCRIPTION	DATE

PROJECT

POND STREET RESIDENCES

12 POND STREET
ASHLAND, MA 01721
JCBT PROJECT # 20007

SHEET TITLE
TYPICAL PLAN DETAILS

DRAWN:	
SCALE:	NOTED
DATE:	
CHECKED:	
SHEET OF	

DRAWING NO:
A-601

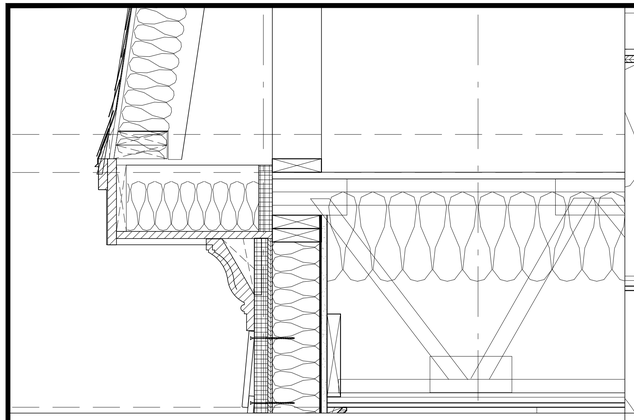

1 TYP. DETAIL ROOF EAVE
1 1/2" = 1'-0"

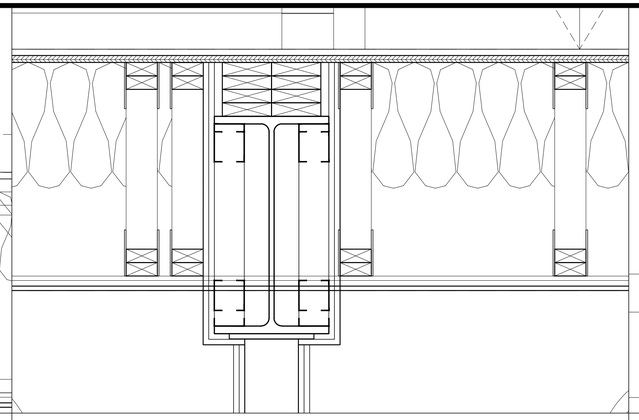

4 ROOF & CORRIDOR SOFFIT DTL.
1 1/2" = 1'-0"

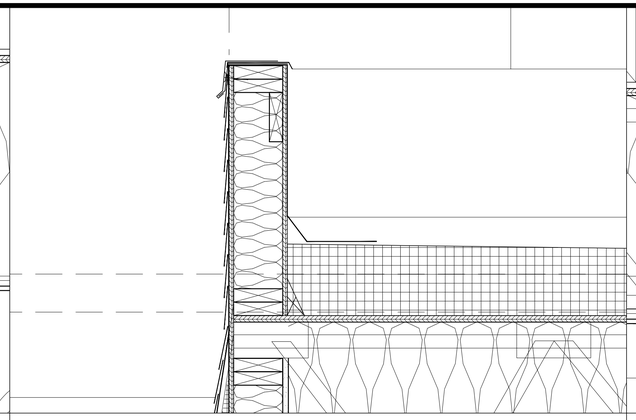

7 DTL AT PARAPET AT MANSARD ROOF
1 1/2" = 1'-0"

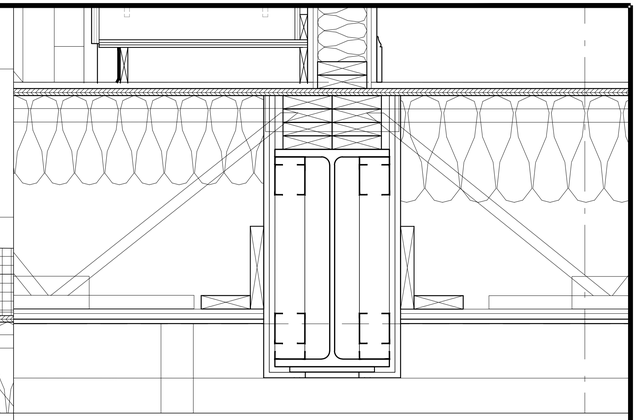

9 DTL. AT CORRIDOR WALL
1-1/2" = 1'-0"

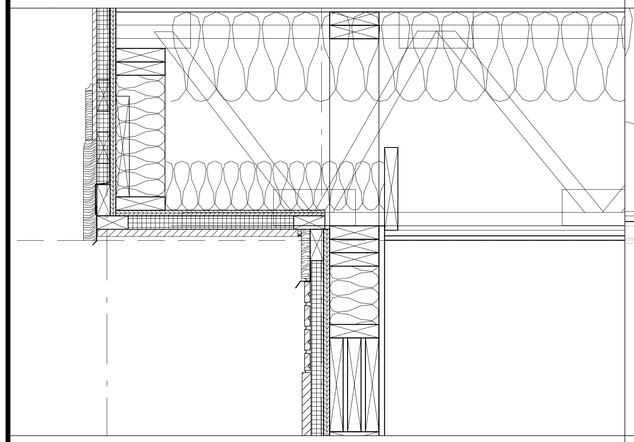

2 TYP. WINDOW HEAD DETAIL @ BRICK VENEER
1-1/2" = 1'-0"

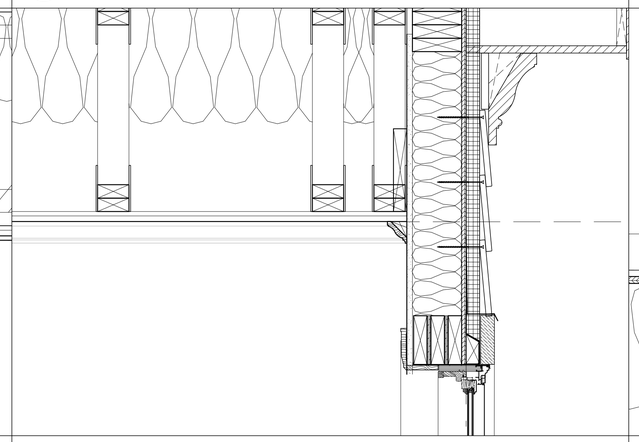

5 TYP. WINDOW HEAD DETAIL @ SIDING
3" = 1'-0"

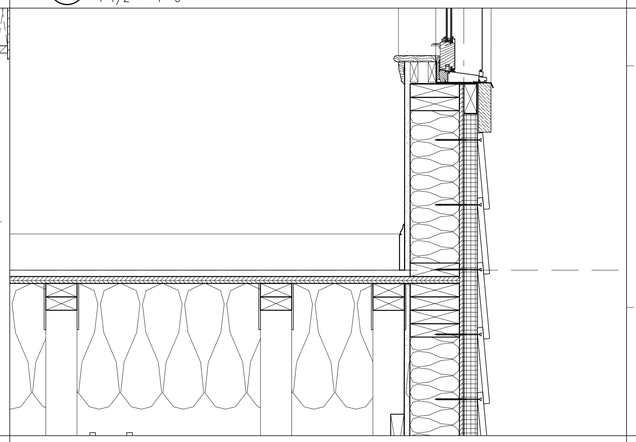

8 TYP. WINDOW SILL DETAIL @ SIDING
3" = 1'-0"

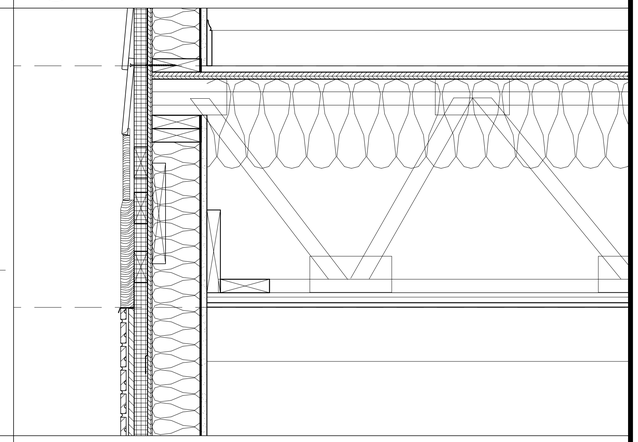

11 DTL. AT BAND @ SIDING & BRICK TRANSITION
1 1/2" = 1'-0"

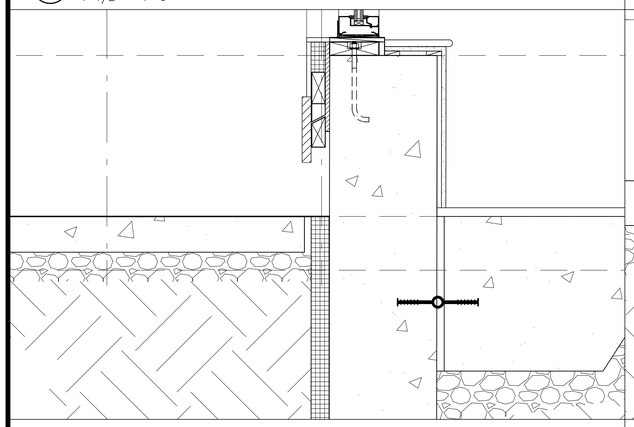

3 ALUMIUM WINDOW SILL AT COMMERCIAL UNIT
1 1/2" = 1'-0"

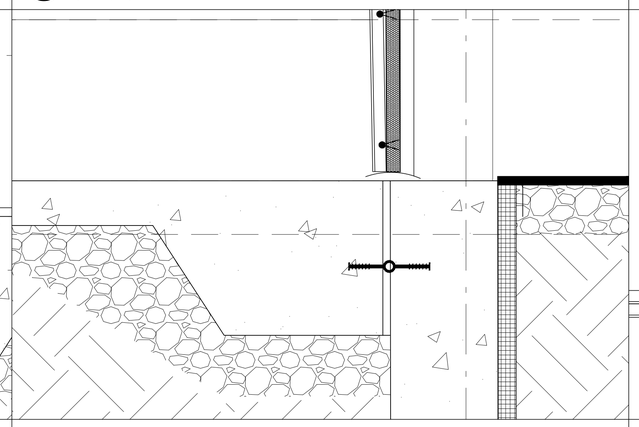

6 GARAGE ENTRY DOOR DETAIL
1 1/2" = 1'-0"

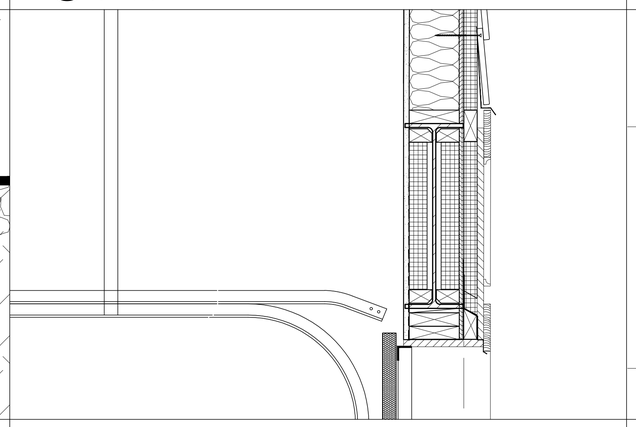

9 GARAGE DOOR HEADER DTL.
3" = 1'-0"

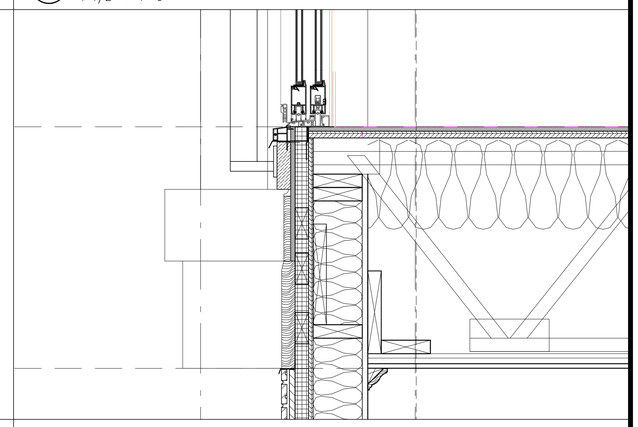

12 DTL. AT JULIET BALCONT & @ BRICK VENEER
1 1/2" = 1'-0"

JCBT
ARCHITECT
585 WASHINGTON STREET, QUINCY, MA 02169
ADMIN@JCBTARCHITECT.COM
TEL: (617) 404-8182

CONSULTANT

REGISTRATION

REGISTERED ARCHITECT
JIM CHEN
No. 51071
QUINCY, MA
04/01/2020

REVISIONS

NO.	BY	DESCRIPTION	DATE

PROJECT

POND STREET RESIDENCES

12 POND STREET
ASHLAND, MA 01721
JCBT PROJECT # 20007

SHEET TITLE

PROPOSED
WALL SECTION DETAILS

DRAWN:
SCALE: NOTED
DATE:
CHECKED:
SHEET OF

DRAWING NO:

A-610

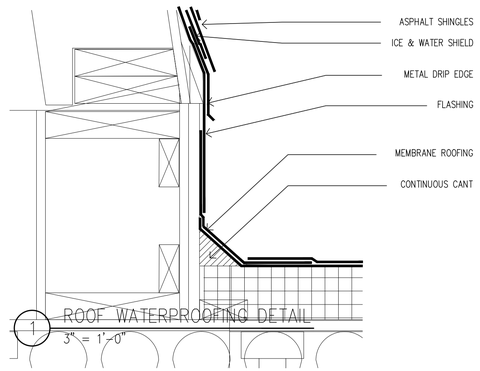

1 ROOF WATERPROOFING DETAIL
3" = 1'-0"

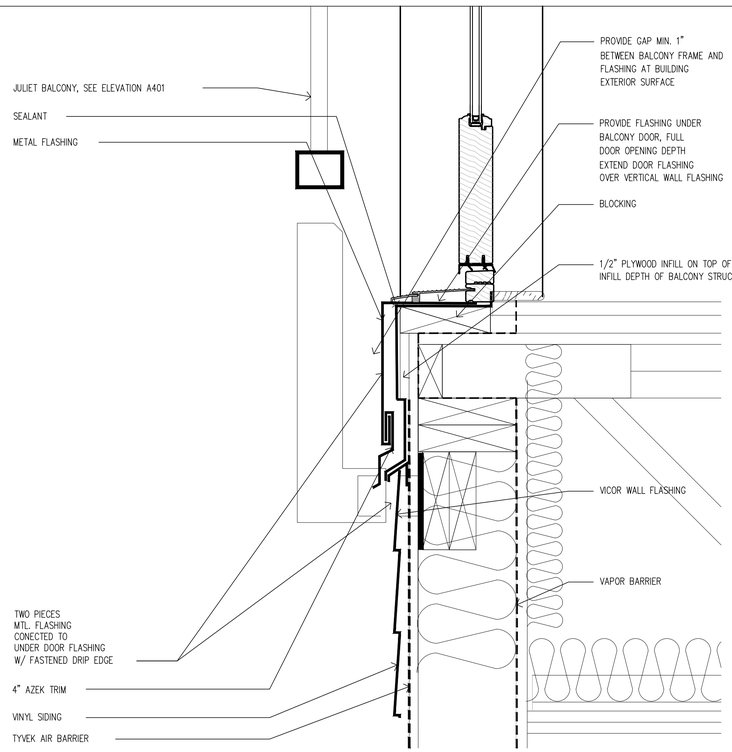

3 PATIO DOOR WATERPROOFING DETAIL
3" = 1'-0"

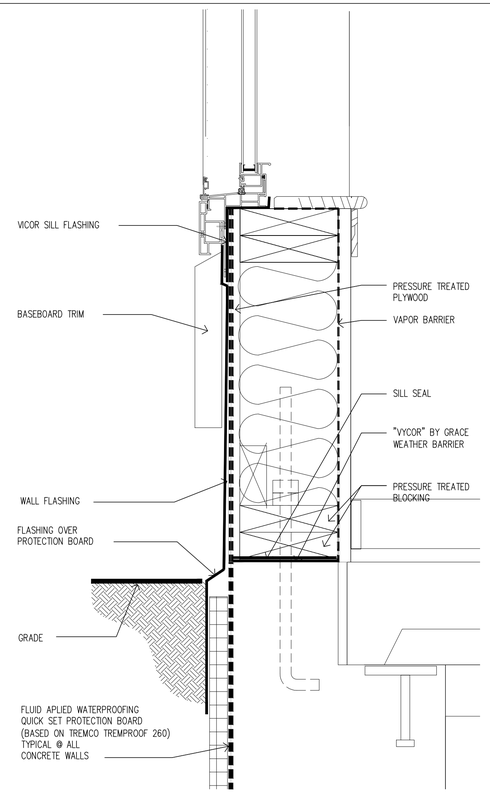

4 FOUNDATION WATERPROOFING DETAIL
3" = 1'-0"

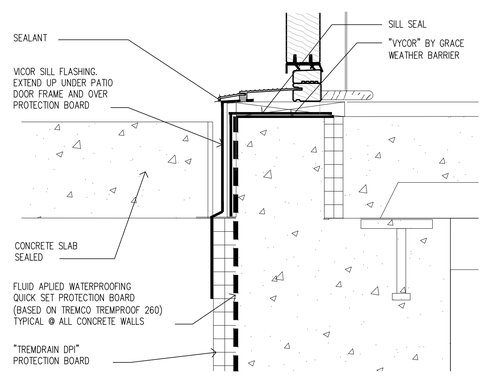

5 FOUNDATION WATERPROOFING DETAIL
3" = 1'-0"

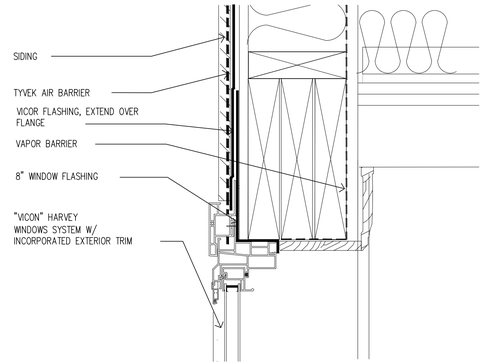

7 WINDOW HEAD WATERPROOFING DETAIL
3" = 1'-0"

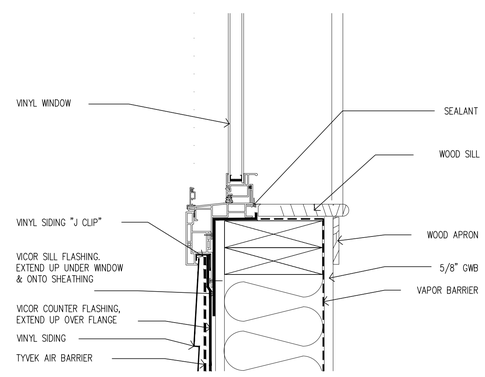

8 WINDOW SILL WATERPROOFING DETAIL
3" = 1'-0"

JCBT ARCHITECT
585 WASHINGTON STREET, QUINCY, MA 02169
ADMIN@JCBTARCHITECT.COM
TEL: (617) 404-8182

CONSULTANT

REGISTRATION

REGISTERED ARCHITECT JIM CHEN No. 51071 QUINCY, MA COMMONWEALTH OF MASSACHUSETTS

04/01/2020

REVISIONS

NO.	BY	DESCRIPTION	DATE

PROJECT

POND STREET RESIDENCES

12 POND STREET
ASHLAND, MA 01721
JCBT PROJECT # 20007

SHEET TITLE

WATERPROOFING DETAILS

DRAWN:	DRAWING NO:
SCALE: NOTED	A-615
DATE:	
CHECKED:	
SHEET OF	

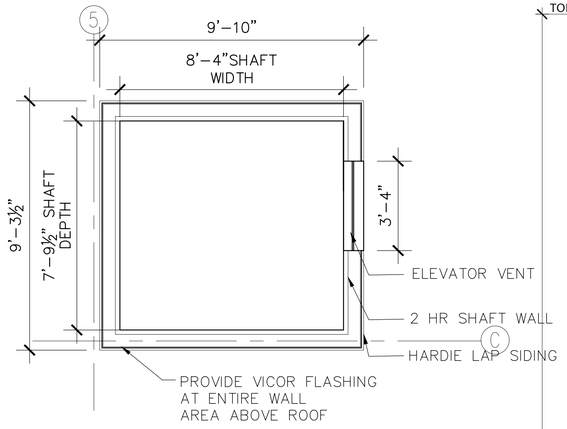

2A ELEVATOR SHAFT ABOVE ROOF
SCALE: 1" = 1'-0"

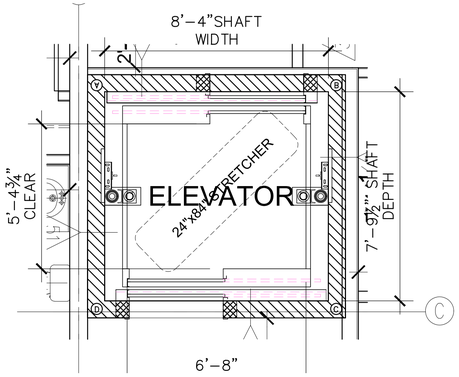

2 2nd & 3rd FLOOR - ELEVATOR SHAFT
SCALE: 3/8" = 1'-0"

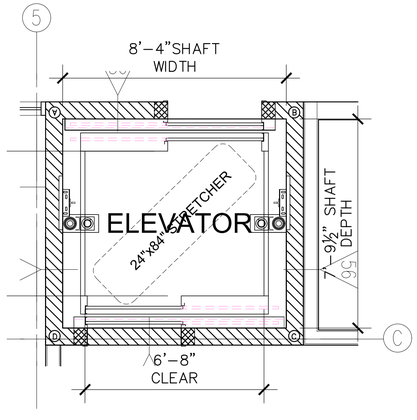

1 GARAGE/1st FLOOR PLAN - ELEVATOR SHAFT
SCALE: 3/8" = 1'-0"

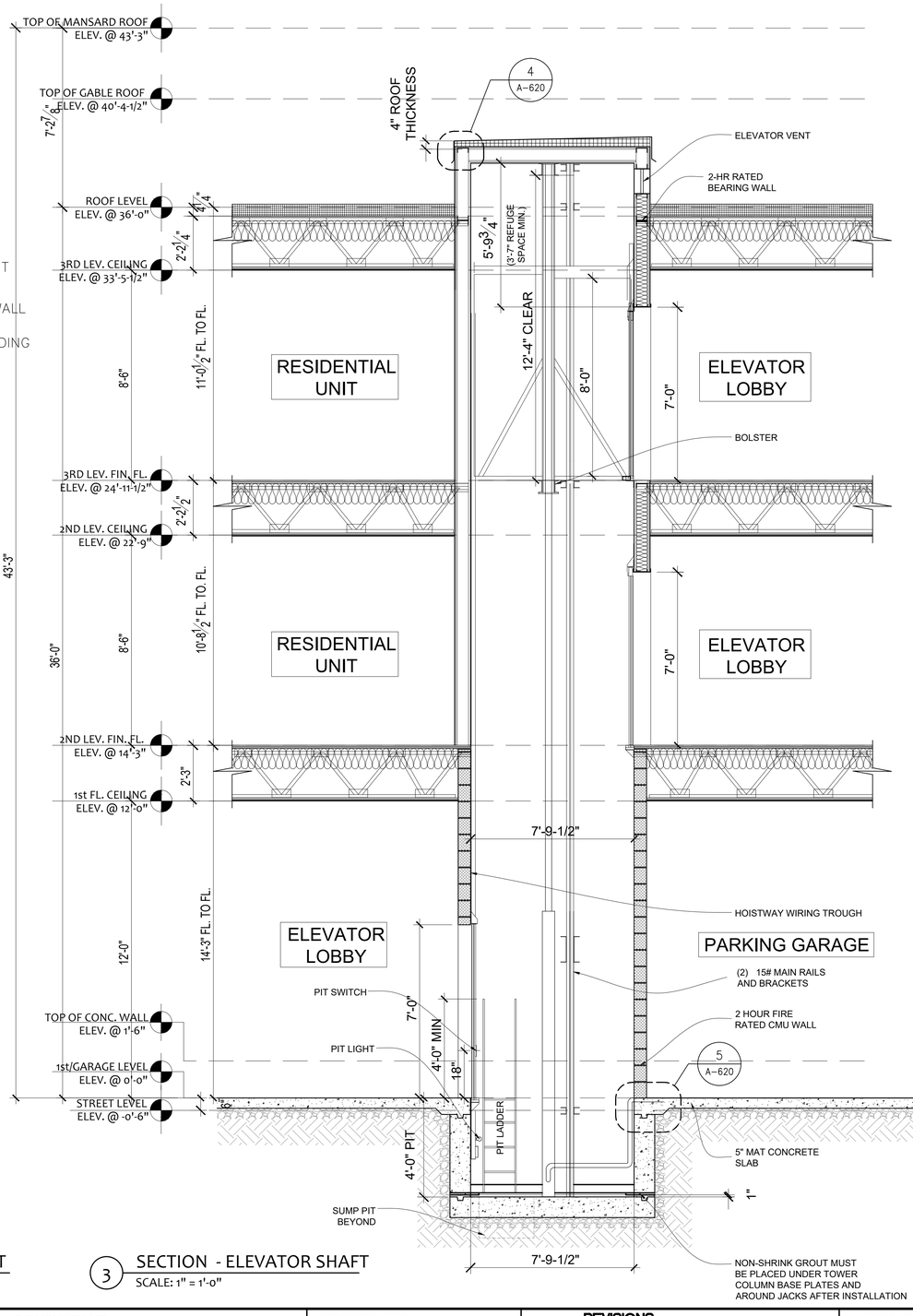

3 SECTION - ELEVATOR SHAFT
SCALE: 1" = 1'-0"

521 CMR 28.7 ELEVATOR CAR

The elevator cab shall be a minimum of 54 inches by 68 inches (54" x 68") measured wall-to-wall and wall-to-door, or may be 60 inches by 60 inches, (60" by 60") wall-to-wall and wall to wall. The door can be located on any wall or walls.

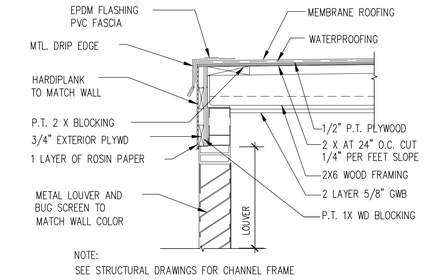

4 DETAIL @ ROOF
1"=1'-0"

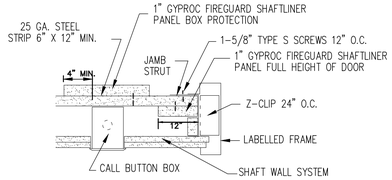

ELEVATOR DOOR FRAME JAMB
ELEVATOR SHAFTWALL – CALL BUTTON BOX

6 DETAIL @ CALL BUTTON BOX
SCALE: 1" = 1'-0"

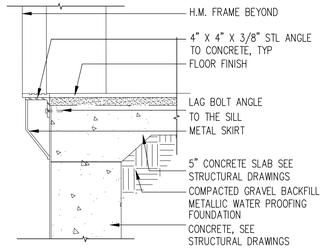

5 DETAIL @ FIRST FLOOR SLAB
1"=1'-0"

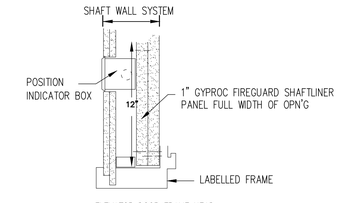

ELEVATOR DOOR FRAME HEAD
ELEVATOR SHAFTWALL – POSITION INDICATOR BOX

7 DETAIL @ POSITION INDICATOR BOX
SCALE: 1" = 1'-0"

JC BT ARCHITECT
585 WASHINGTON STREET, QUINCY, MA 02169
ADMIN@JCBTARCHITECT.COM
TEL: (617) 404-8182

CONSULTANT

REGISTRATION

COMMONWEALTH OF MASSACHUSETTS REGISTERED ARCHITECT JIM CHEN No. 51071 QUINCY, MA

04/01/2020

REVISIONS

NO.	BY	DESCRIPTION	DATE

PROJECT

POND STREET RESIDENCES

12 POND STREET
ASHLAND, MA 01721
JCBT PROJECT # 20007

SHEET TITLE
ELEVATOR PLAN, SECTION & DETAILS

DRAWN:
SCALE: NOTED
DATE:
CHECKED:
SHEET OF

DRAWING NO:
A-620

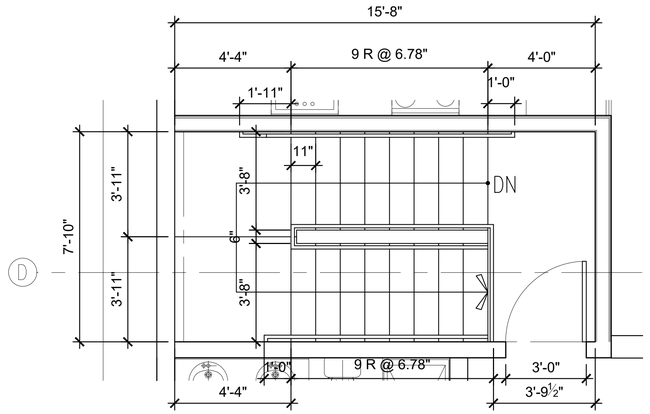

3 STAIR #1 THIRD FLOOR PLAN
SCALE: 3/8" = 1'-0"

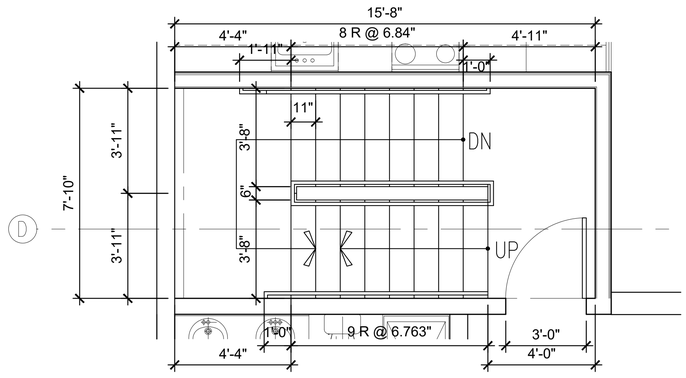

2 STAIR #1 SECOND FLOOR PLAN
SCALE: 3/8" = 1'-0"

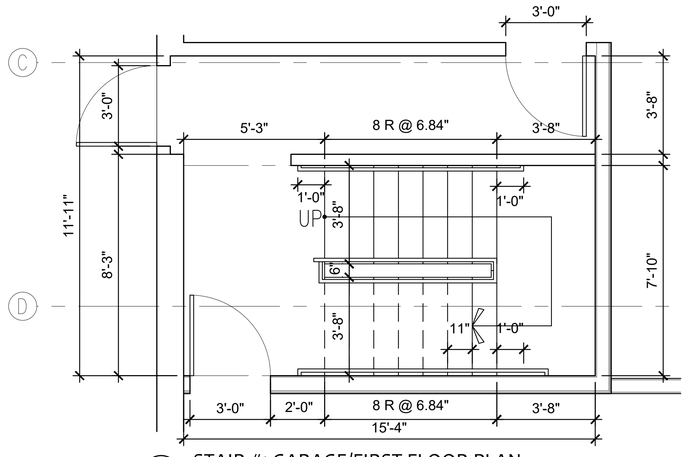

1 STAIR #1 GARAGE/FIRST FLOOR PLAN
SCALE: 3/8" = 1'-0"

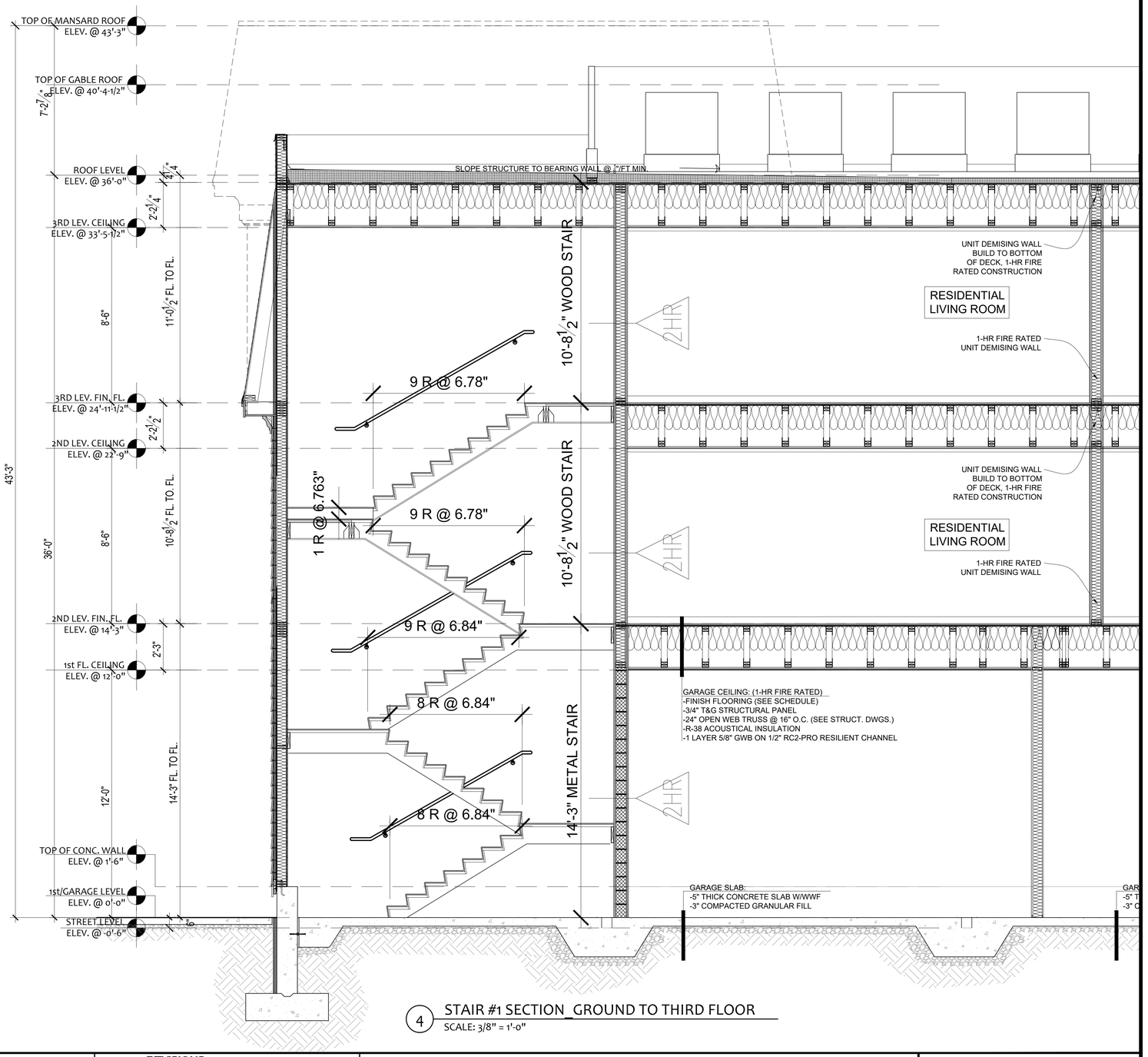

4 STAIR #1 SECTION_GROUND TO THIRD FLOOR
SCALE: 3/8" = 1'-0"

JC BT
ARCHITECT
585 WASHINGTON STREET, QUINCY, MA 02169
ADMIN@JCBTARCHITECT.COM
TEL: (617) 404-8182

CONSULTANT

REGISTRATION

JIM CHEN
REGISTERED ARCHITECT
No. 51071
QUINCY, MA
COMMONWEALTH OF MASSACHUSETTS
04/01/2020

REVISIONS

NO.	BY	DESCRIPTION	DATE

PROJECT

POND STREET RESIDENCES

12 POND STREET
ASHLAND, MA 01721
JCBT PROJECT # 20007

SHEET TITLE

STAIR #1 PLAN
& SECTION

DRAWN:	
SCALE:	NOTED
DATE:	
CHECKED:	
SHEET OF	

DRAWING NO:

A-625

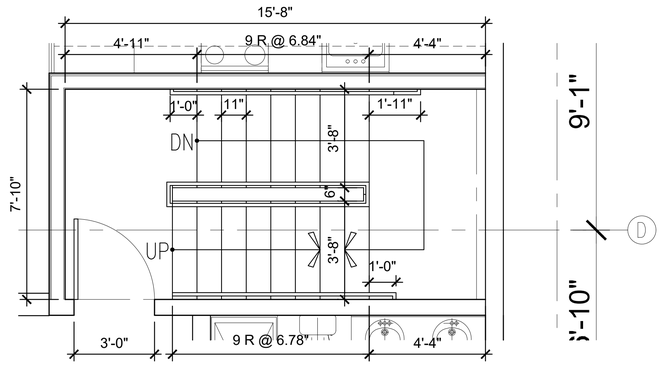

2 STAIR #2 SECOND FLOOR PLAN
SCALE: 3/8" = 1'-0"

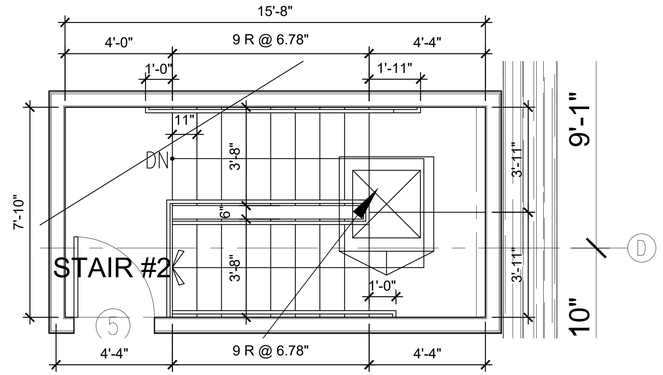

4 STAIR #2 ROOF FLOOR PLAN
SCALE: 3/8" = 1'-0"

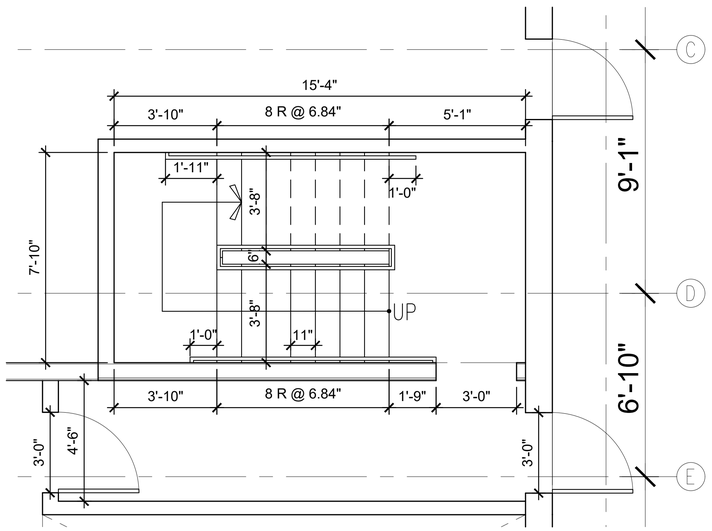

1 STAIR #2 GARAGE/FIRST FLOOR PLAN
SCALE: 3/8" = 1'-0"

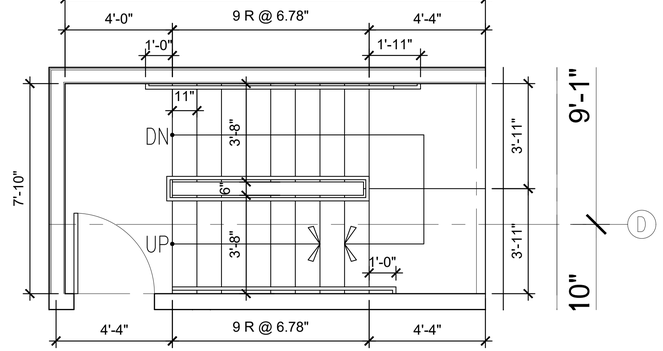

3 STAIR #2 THIRD FLOOR PLAN
SCALE: 3/8" = 1'-0"

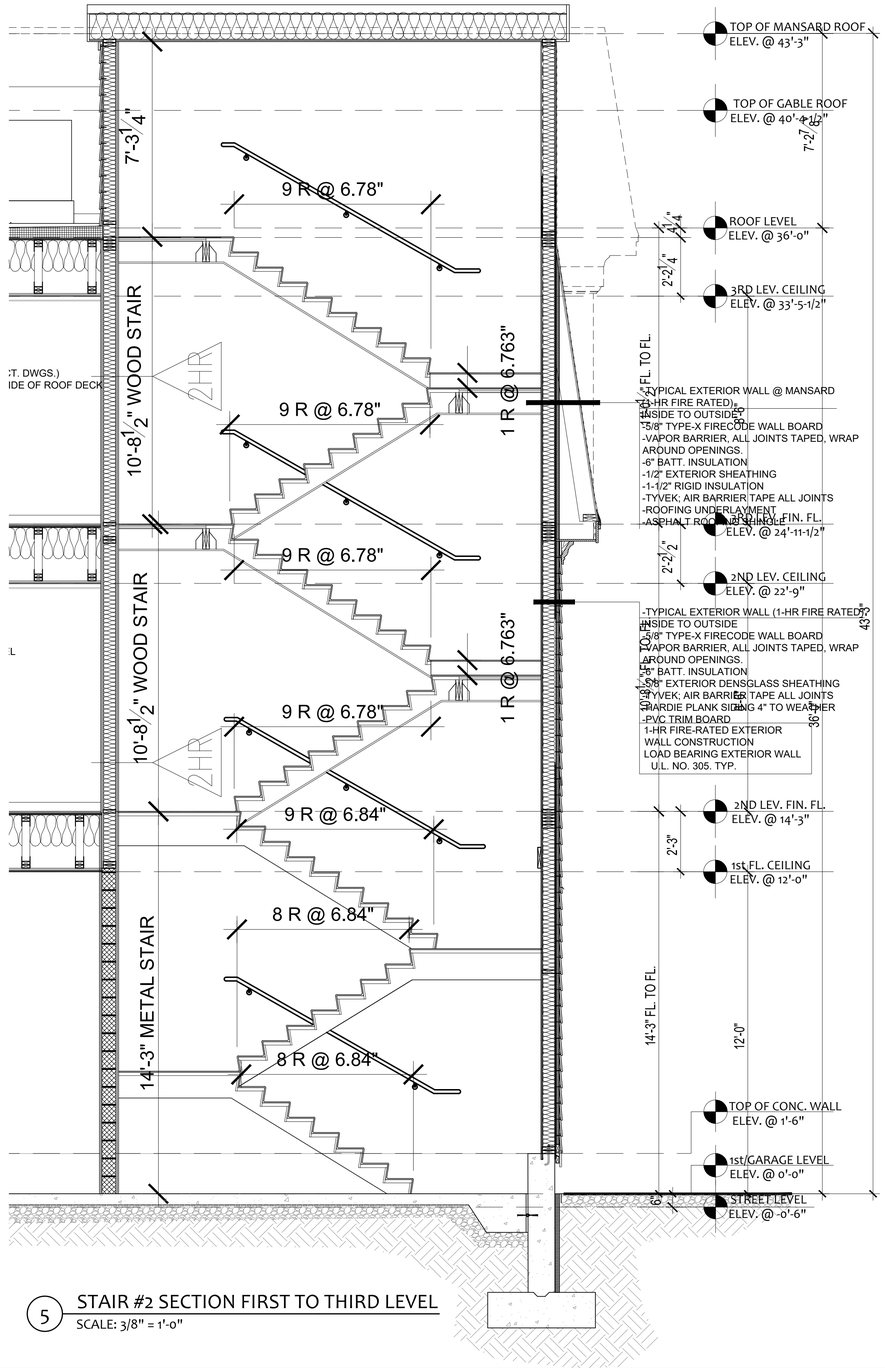

5 STAIR #2 SECTION FIRST TO THIRD LEVEL
SCALE: 3/8" = 1'-0"

JC BT ARCHITECT
585 WASHINGTON STREET, QUINCY, MA 02169
ADMIN@JCBTARCHITECT.COM
TEL: (617) 404-8182

CONSULTANT

REGISTRATION

JIM CHEN REGISTERED ARCHITECT No. 51071 QUINCY, MA
04/01/2020

REVISIONS

NO.	BY	DESCRIPTION	DATE

PROJECT

POND STREET RESIDENCES

12 POND STREET
ASHLAND, MA 01721
JCBT PROJECT # 20007

SHEET TITLE
STAIR #2 PLAN & SECTION

DRAWN:	
SCALE:	NOTED
DATE:	
CHECKED:	
SHEET OF	

DRAWING NO:
A-626

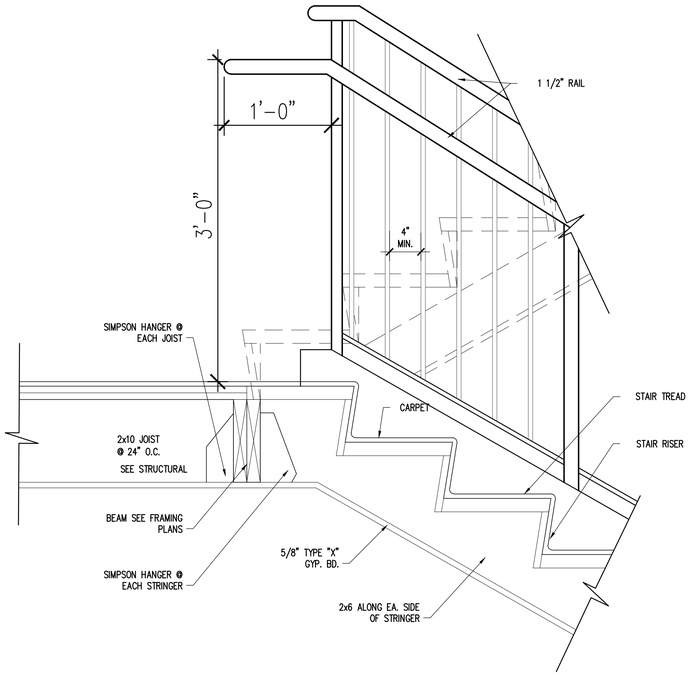

1 STAIR CONNECTION DETAIL @ LANDING
SCALE: 1-1/2" = 1'-0"

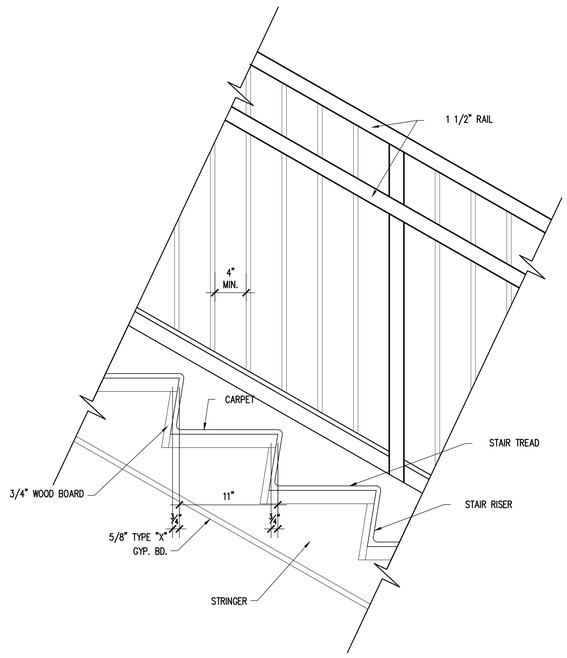

2 STAIR DETAIL
SCALE: 1-1/2" = 1'-0"

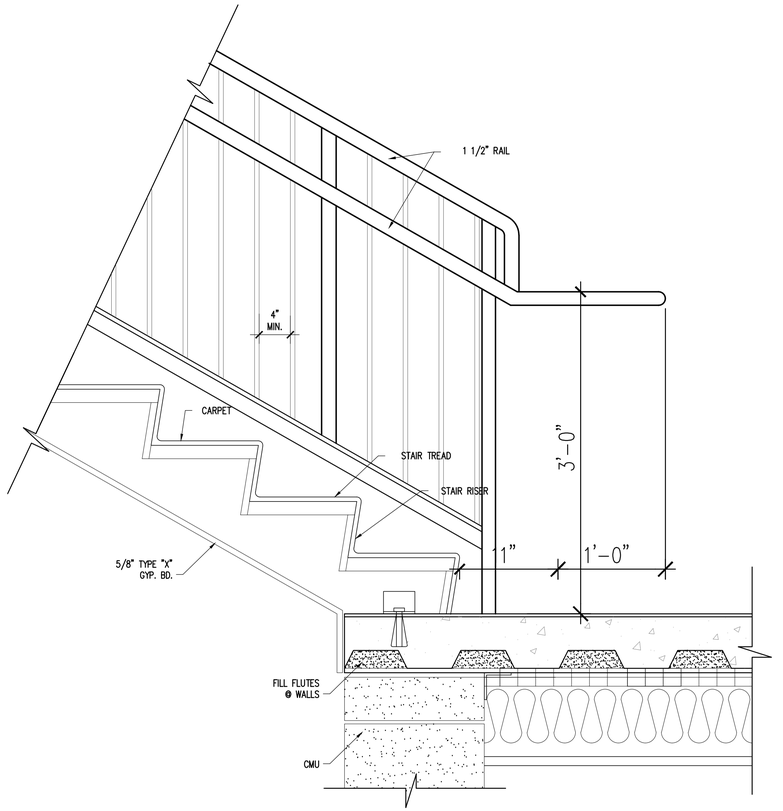

3 FLOOR/STAIR DETAILS
SCALE: 1-1/2" = 1'-0"

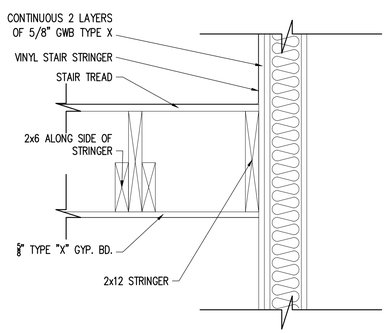

4 STRINGER DETAIL
SCALE: 1-1/2" = 1'-0"

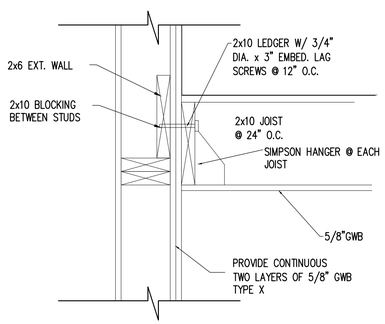

5 STAIR CONNECTION DETAIL @ EXT. WALL
SCALE: 1-1/2" = 1'-0"

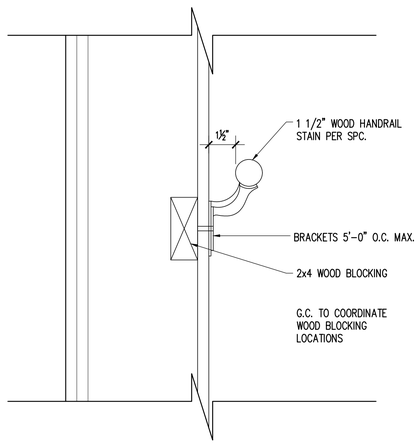

6 HANDRAIL DETAIL
SCALE: 3" = 1'-0"

JC BT ARCHITECT
585 WASHINGTON STREET, QUINCY, MA 02169
ADMIN@JCBTARCHITECT.COM
TEL: (617) 404-8182

CONSULTANT

REGISTRATION

REGISTERED ARCHITECT JIM CHEK No. 51071 QUINCY, MA COMMONWEALTH OF MASSACHUSETTS

04/01/2020

REVISIONS

NO.	BY	DESCRIPTION	DATE

PROJECT

POND STREET RESIDENCES

12 POND STREET
ASHLAND, MA 01721
JCBT PROJECT # 20007

SHEET TITLE
STAIR DETAILS

DRAWN:
SCALE: NOTED
DATE:
CHECKED:
SHEET OF

DRAWING NO:
A-627

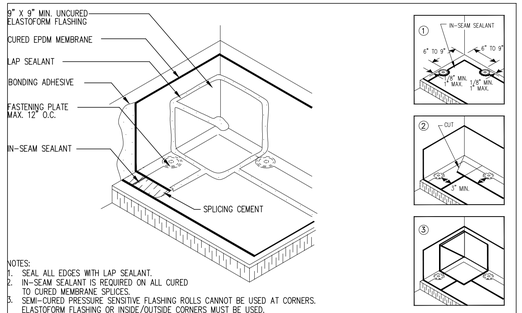

NOTES:
1. SEAL ALL EDGES WITH LAP SEALANT.
2. IN-SEAM SEALANT IS REQUIRED ON ALL CURED TO CURED MEMBRANE SPLICES.
3. SEMI-CURED PRESSURE SENSITIVE FLASHING ROLLS CANNOT BE USED AT CORNERS. ELASTOFORM FLASHING OR INSIDE/OUTSIDE CORNERS MUST BE USED.

1 INSIDE CORNER FLASHING DETAIL
N.T.S.

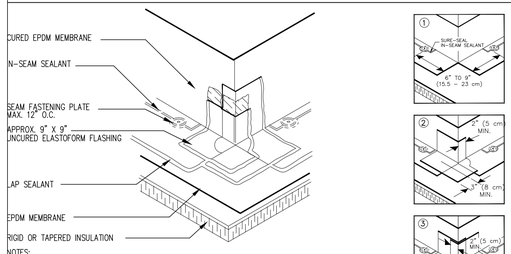

NOTES:
1. UNCURED ELASTOFORM FLASHING TO OVERLAP DECK MEMBRANE 3 IN. MINIMUM AND EXTEND 2 IN. MINIMUM AROUND CORNERS.
2. SEAL ALL EDGES WITH LAP SEALANT.
3. A HEAT GUN MUST BE USED WHEN FORMING FLASHING.
4. SEMI-CURED PRESSURE SENSITIVE FLASHING ROLLS CANNOT BE USED AT CORNERS. ELASTOFORM FLASHING OUTSIDE CORNERS MUST BE USED.

5 OUTSIDE CORNER FLASHING DETAIL
N.T.S.

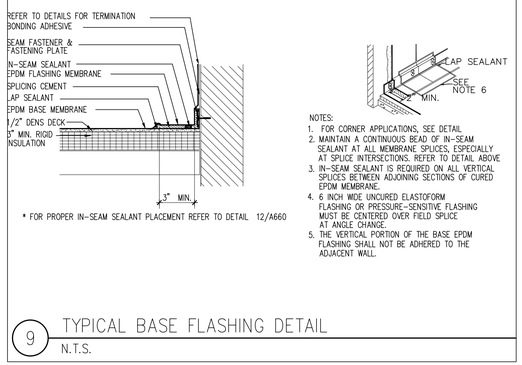

* FOR PROPER IN-SEAM SEALANT PLACEMENT REFER TO DETAIL 12/A660

NOTES:
1. FOR CORNER APPLICATIONS, SEE DETAIL
2. MAINTAIN A CONTINUOUS BEAD OF IN-SEAM SEALANT AT ALL MEMBRANE SPLICES, ESPECIALLY AT SPLICE INTERSECTIONS. REFER TO DETAIL ABOVE
3. IN-SEAM SEALANT IS REQUIRED ON ALL VERTICAL SPLICES BETWEEN ADJOINING SECTIONS OF CURED EPDM MEMBRANE.
4. 6 INCH WIDE UNCURED ELASTOFORM FLASHING OR PRESSURE-SENSITIVE FLASHING MUST BE CENTERED OVER FIELD SPLICE AT ANGLE CHANGE.
5. THE VERTICAL PORTION OF THE BASE EPDM FLASHING SHALL NOT BE ADHERED TO THE ADJACENT WALL.

9 TYPICAL BASE FLASHING DETAIL
N.T.S.

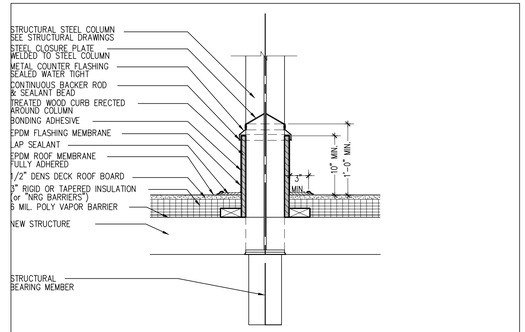

2 TYPICAL STEEL COLUMN FLASHING DETAIL
1"=1'-0"

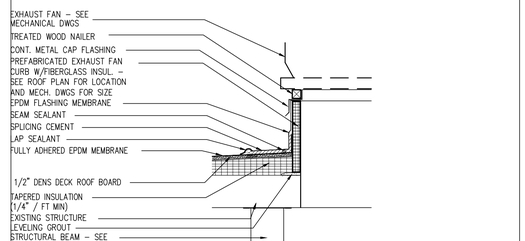

6 MECHANICAL CURB FLASHING DETAIL
1"=1'-0"

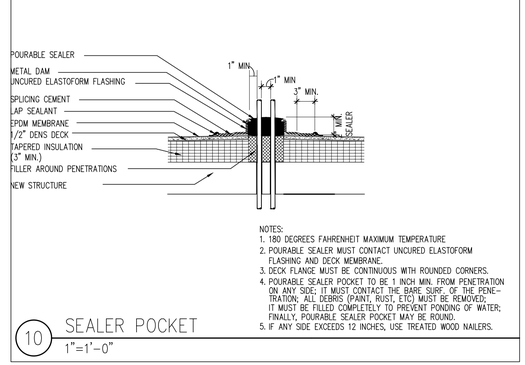

NOTES:
1. 180 DEGREES FAHRENHEIT MAXIMUM TEMPERATURE
2. POURABLE SEALER MUST CONTACT UNCURED ELASTOFORM FLASHING AND DECK MEMBRANE.
3. DECK FLANGE MUST BE CONTINUOUS WITH ROUNDED CORNERS.
4. POURABLE SEALER POCKET TO BE 1 INCH MIN. FROM PENETRATION ON ANY SIDE; IT MUST CONTACT THE BARE SURF. OF THE PENE-TRATION; ALL DEBRIS (PAINT, RUST, ETC) MUST BE REMOVED; IT MUST BE FILLED COMPLETELY TO PREVENT PONDING OF WATER; FINALLY, POURABLE SEALER POCKET MAY BE ROUND.
5. IF ANY SIDE EXCEEDS 12 INCHES, USE TREATED WOOD NAILERS.

10 SEALER POCKET
1"=1'-0"

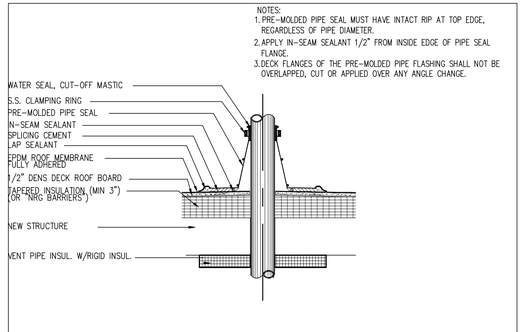

NOTES:
1. PRE-MOLDED PIPE SEAL MUST HAVE INTACT RIP AT TOP EDGE, REGARDLESS OF PIPE DIAMETER.
2. APPLY IN-SEAM SEALANT 1/2" FROM INSIDE EDGE OF PIPE SEAL FLANGE.
3. DECK FLANGES OF THE PRE-MOLDED PIPE FLASHING SHALL NOT BE OVERLAPPED, CUT OR APPLIED OVER ANY ANGLE CHANGE.

3 (1"-6 1/2") PREFORMED PIPE FLASHING DETAIL
1"=1'-0"

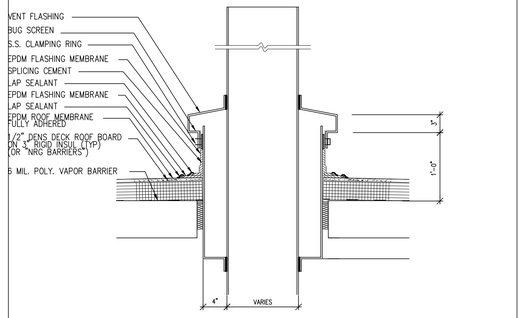

7 FLASHING DETAIL @ FLUE
1"=1'-0"

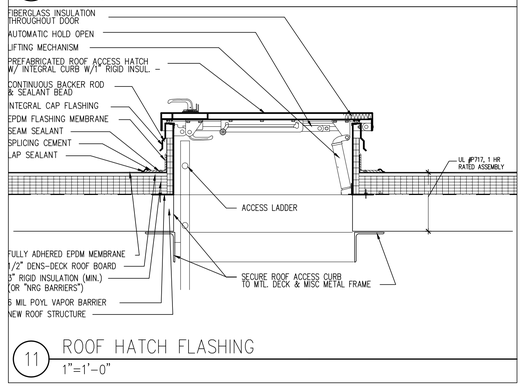

11 ROOF HATCH FLASHING
1"=1'-0"

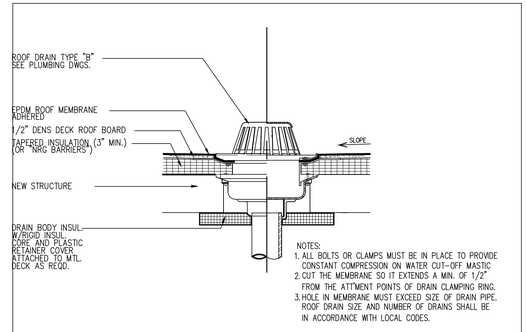

NOTES:
1. ALL BOLTS OR CLAMPS MUST BE IN PLACE TO PROVIDE CONSTANT COMPRESSION ON WATER CUT-OFF MASTIC
2. CUT THE MEMBRANE SO IT EXTENDS A MIN. OF 1/2" FROM THE ATTMENT POINTS OF DRAIN CLAMPING RING.
3. HOLE IN MEMBRANE MUST EXCEED SIZE OF DRAIN PIPE. ROOF DRAIN SIZE AND NUMBER OF DRAINS SHALL BE IN ACCORDANCE WITH LOCAL CODES.

4 ROOF DRAIN @ TAPERD INSULATION
1"=1'-0"

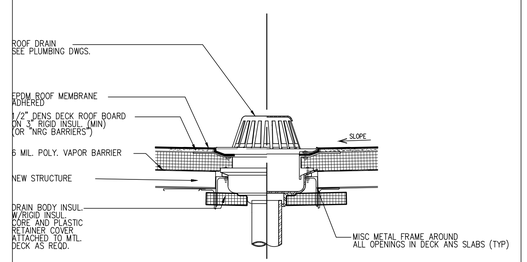

8 ROOF DRAIN DETAIL
1"=1'-0"

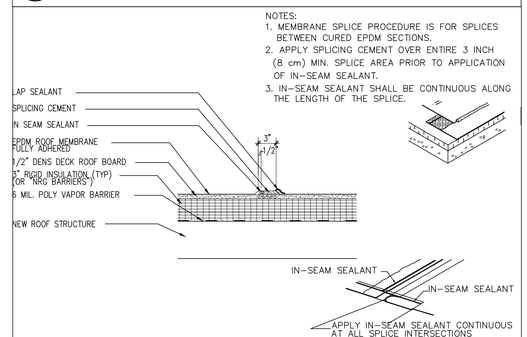

NOTES:
1. MEMBRANE SPLICE PROCEDURE IS FOR SPLICES BETWEEN CURED EPDM SECTIONS.
2. APPLY SPLICING CEMENT OVER ENTIRE 3 INCH (8 cm) MIN. SPLICE AREA PRIOR TO APPLICATION OF IN-SEAM SEALANT.
3. IN-SEAM SEALANT SHALL BE CONTINUOUS ALONG THE LENGTH OF THE SPLICE.

12 TYPICAL MEMBRANE SPLICE DETAIL
1"=1'-0"

JCBT ARCHITECT
585 WASHINGTON STREET, QUINCY, MA 02169
ADMIN@JCBTARCHITECT.COM
TEL: (617) 404-8182

CONSULTANT

REGISTRATION

REGISTERED ARCHITECT JIM CHEN No. 51071 QUINCY, MA

04/01/2020

REVISIONS

NO.	BY	DESCRIPTION	DATE

PROJECT

POND STREET RESIDENCES

12 POND STREET
ASHLAND, MA 01721
JCBT PROJECT # 20007

SHEET TITLE

TYPICAL ROOF DETAILS

DRAWN:	DRAWING NO:
SCALE: NOTED	A-660
DATE:	
CHECKED:	
SHEET OF	

DOOR SCHEDULE

		DOOR							FRAMES						REMARKS
		SIZE			TYPE	MAT'L.	FIN.	LABEL	TYPE	MAT'L	DETAILS			HARD'W. SET	
		width	height	thick							jamb	head	sill		
UNIT ENTRY	1	3'-0"	6'-8"	1-3/4"	A	Masonite	PTD.	45 Min	1	MTL.	12	13	–		FIRE RATED FRAME, CLOSER
UNIT INTERIOR/BEDROOM	2	2'-10"	6'-8"	1-3/4"	B	Masonite	PTD.	——	2	WD.	8	9	–		
UNIT INTERIOR/BATHROOM	3	2'-10"	6'-8"	1-3/4"	B	Masonite	PTD.	——	2	WD.	8	9	–		
LINEN CLOSET	4	1'-10"	6'-8"	1-3/4"	B	Masonite	PTD.	——	2	WD.	8	9	–		
CLOSET- W/D	2B	2'-10"	6'-8"	1-3/4"	B	Masonite	PTD.	——	2	WD.	8	9	–		
CLOSET	2C	2'-6"	6'-8"	1-3/4"	B	Masonite	PTD.	——	2	WD.	8	9	–		
LAUNDRY BIFOLD	B1	2'-8"	6'-8"	1-3/8"	C	Masonite	PTD.	——	4	WD.	10	11	–		FLUSH BRASS PULL
CLOSET BIFOLD	B5	5'-0"	6'-8"	1-3/8"	C	Masonite	PTD.	——	4	WD.	10	11	–		FLUSH BRASS PULL
CLOSET DOUBLE SWING	S4	4'-0"	6'-8"	1-3/8"	D	Masonite	PTD.	——	4	WD.	10	11	–		FLUSH BRASS PULLS
CLOSET DOUBLE SWING	S5	5'-0"	6'-8"	1-3/8"	D	Masonite	PTD.	——	4	WD.	10	11	–		FLUSH BRASS PULLS
CLOSET DOUBLE SWING	S6	6'-0"	6'-8"	1-3/8"	D	Masonite	PTD.	——	4	WD.	10	11	–		FLUSH BRASS PULLS
STAIR	5	3'-0"	6'-8"	1-3/4"	E	H.M	PTD.	45 Min	5	MTL.	14	15	–		
LOBBY/GARAGE	6	3'-0"	6'-8"	1-3/4"	E	H.M	PTD.		3	H.M	22	23	6		FIRE RATED FRAME, CLOSER, PANIC BAR, KICK PLATE
MECHANICAL CLO. INSIDE UNIT	7	3'-0"	6'-8"	1-3/4"	B	Masonite	PTD.	——	2	WD.					FIRE RATED FRAME, CLOSER, KICK PLATE, PANIC BAR
LOBBY ENTRY	8	6'-0"	6'-8"	1-3/8"	G	WD	PTD		2	WD.	3	4	5		CLOSER, WEATHERSTRIPPING, KICK PLATE, PANIC BAR
EXTERIOR ACCESS DOOR	9	3'-0"	6'-8"	1-3/4"	E	H.M	PTD.	45 Min	5	MTL.	14	15	–		FIRE RATED FRAME, CLOSER, PANIC BAR, KICK PLATE
MAIN LOBBY @ GARAGE ENTRY	10	3'-0"	7'-0"	1-3/8"	M	Alum.	Kynar	45 Min	9	Alum.	3	4	5		
MECHANICAL ROOM	11	6'-0"	6'-8"	1-3/4"	H	H.M.	PTD.	45 Min	6	MTL.	18	19	–		FIRE RATED FRAME, CLOSER, KICK PLATE
GAR. STORAGE CLOSETS	12	6'-0"	6'-8"	1-3/4"	H	H.M.	PTD.	——	–	MTL.	–	–	–		
GAS METER	13	6'-0"	6'-8"	1-3/4"	H	Insul. H.M	PTD.	——	6	MTL.	18	19	–		WEATHERSTRIPPING
GARAGE EXIT	14	3'-0"	6'-8"	1-3/4"	J	Insul. H.M	PTD.	——	8	H.M			–		CLOSER, WEATHERSTRIPPING, KICK PLATE, PANIC BAR
ELECTRICAL ROOM	15	3'-0"	6'-8"	1-3/4"	J	H.M	PTD.	90 Min.	5	MTL.	14	15	–		FIRE RATED FRAME, CLOSER, KICK PLATE
ELEV. MACHINE ROOM	16	3'-0"	6'-8"	1-3/4"	J	H.M.	PTD.	45 Min	5	MTL.	14	15	–		FIRE RATED FRAME, CLOSER, KICK PLATE
UTILITY ROOM	17	5'-0"	6'-8"	1-3/4"	J	H.M.	PTD.	45 Min	5	MTL.	14	15	–		TWO LEAFS,FIRE RATED FRAME, CLOSER, KICK PLATE
TRASH/RECYCLE ROOM	18	6'-0"	6'-8"	1-3/4"	FS	H.M	PTD.	90 Min	6	MTL.	18	19	–		FIRE RATED FRAME, CLOSER, KICK PLATE
BIKE PARKING ROOM	19	3'-0"	6'-8"	1-3/4"	J	H.M	PTD.	90 Min.	5	MTL.	14	15	–		
GARAGE OVERHEAD	20	20'-0"	8'-4"	1-3/4"	L	MTL.	PTD.	——		MTL.	2	1	–		WEATHERSTRIPPING, INDEPENDENT SUPPORT
MAIN ENTRY	21	6'-0"	7'-0"	1-3/8"	M	Alum.	Kynar	45 Min	9	Alum.	3	4	5		CLOSER, WEATHERSTRIPPING, KICK PLATE, PANIC BAR 45MIN. F.R.
PATIO DOORS	22	5'-0"	6'-8"	1-3/8"	N	VINYL	PTD.	——	–	–	–	–	–		WEATHERSTRIPPING 45MIN. FIRE RATED PATIO DOOR

DOOR NOTES:
1. DOOR SIZE DIMENSIONS GIVEN REFER TO NOMINAL LEAF DIMENSION. COORDINATE ROUGH OPENING WITH MANUFACTURERS DETAILS.
2. DETAILS REFERENCED IN SCHEDULE ADDRESS TYPICAL INSTALLATION CONDITIONS. REFER TO ELEVATIONS AND DETAIL SECTIONS FOR TRIM CONDITIONS AND ENTRANCES. COORDINATE EXTENSION JAMB DIMENSIONS WITH WALL TYPES REFERENCED IN PLAN.
3. ALL MASONITE DOORS ARE TO BE SMOOTH SKIN.
4. CONTRACTOR IS SOLELY RESPONSIBLE FOR FINAL DOOR COUNT AND RIGHT/LEFT SWING CORDINATION.
5. ALL DOOR HARDWARE TO COMPLY WITH MASSACHUSETTS ARCHITECTURAL ACCESS BOARD REQUIREMENTS.

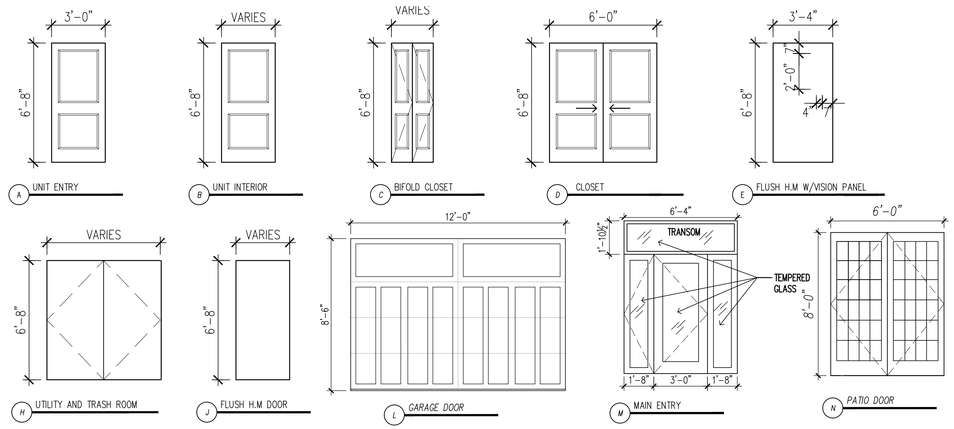

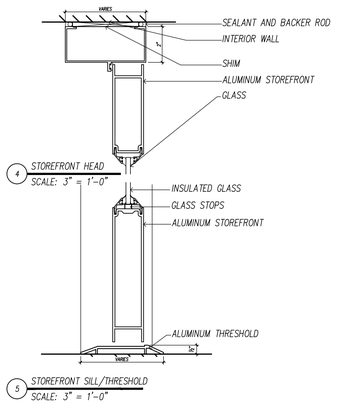

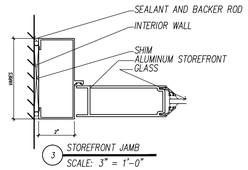

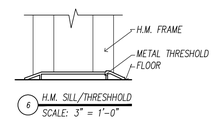

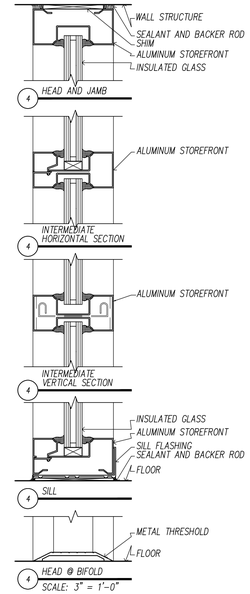

JCBT ARCHITECT
585 WASHINGTON STREET, QUINCY, MA 02169
ADMIN@JCBTARCHITECT.COM
TEL: (617) 404-8182

CONSULTANT

REGISTRATION

REGISTERED ARCHITECT JIM CHEN No. 51071 QUINCY, MA

04/01/2020

REVISIONS

NO.	BY	DESCRIPTION	DATE

PROJECT

POND STREET RESIDENCES

12 POND STREET
ASHLAND, MA 01721
JCBT PROJECT # 20007

SHEET TITLE

DOOR SCHEDULES & DETAILS

DRAWN:
SCALE: NOTED
DATE:
CHECKED:
SHEET OF

DRAWING NO: A-700

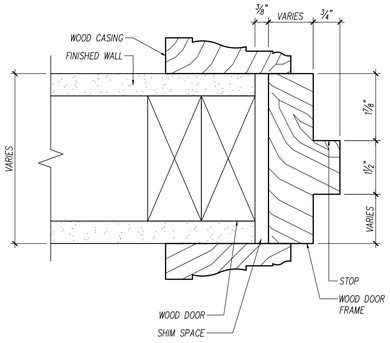

8 WOOD DOOR JAMB W/ WOOD CASING

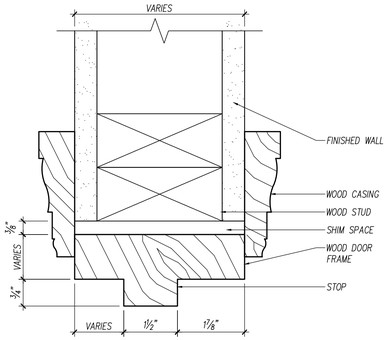

9 WOOD DOOR HEAD W/ WOOD CASING

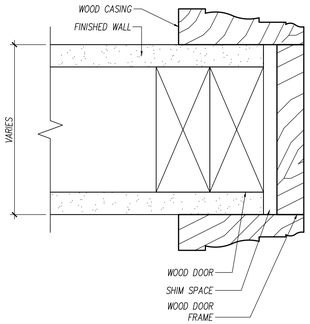

10 BIFOLD JAMB

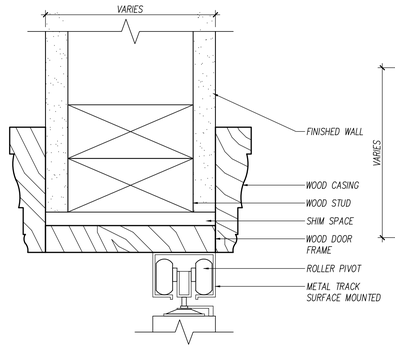

11 BIFOLD HEAD

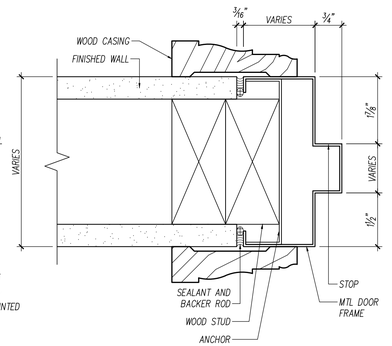

12 H.M. DOOR JAMB W/ WOOD CASING

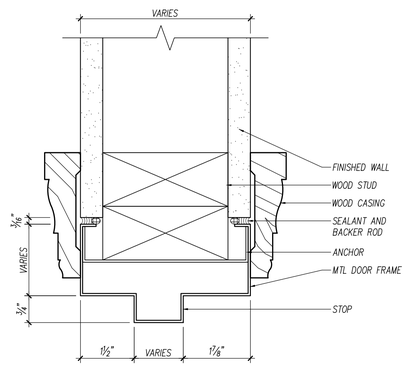

13 WOOD DOOR HEAD W/ WOOD CASING

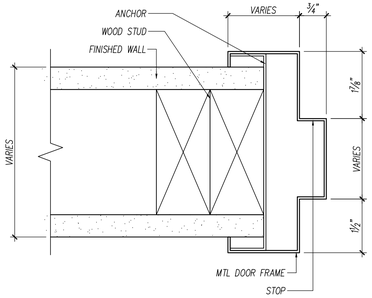

14 H.M. DOOR JAMB

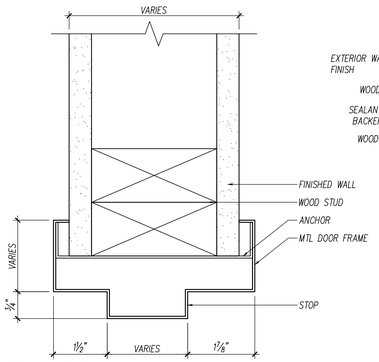

15 H.M. DOOR HEAD

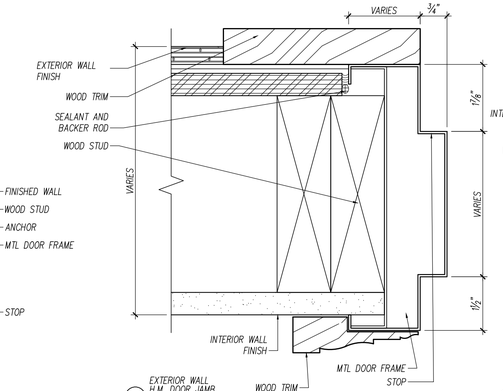

16 EXTERIOR WALL H.M. DOOR JAMB

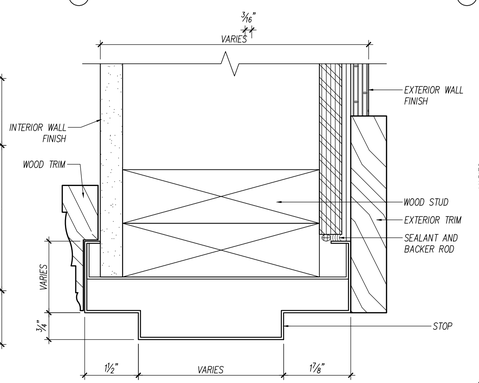

17 EXTERIOR WALL H.M. DOOR HEAD

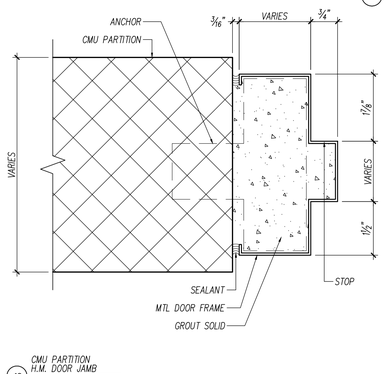

18 CMU PARTITION H.M. DOOR JAMB
6" = 1'-0"

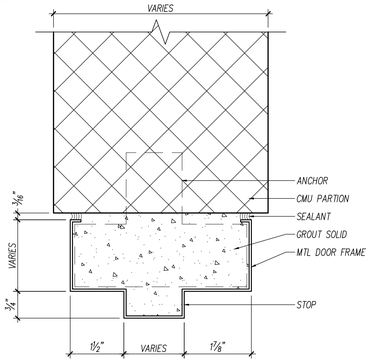

19 CMU PARTITION H.M. DOOR HEAD
6" = 1'-0"

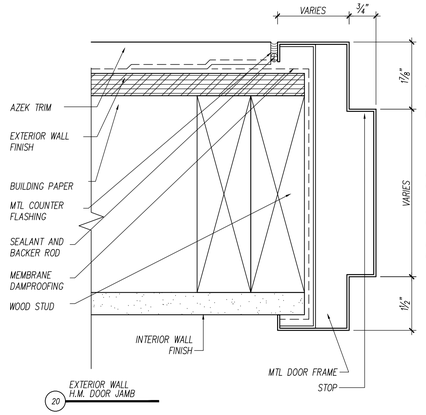

20 EXTERIOR WALL H.M. DOOR JAMB

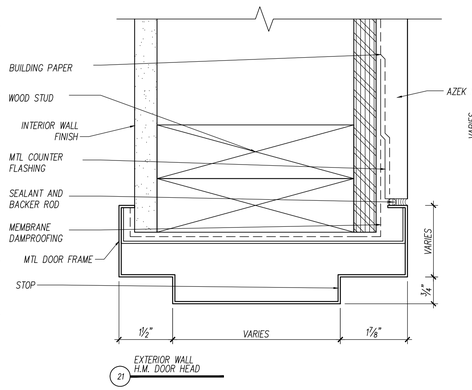

21 EXTERIOR WALL H.M. DOOR HEAD

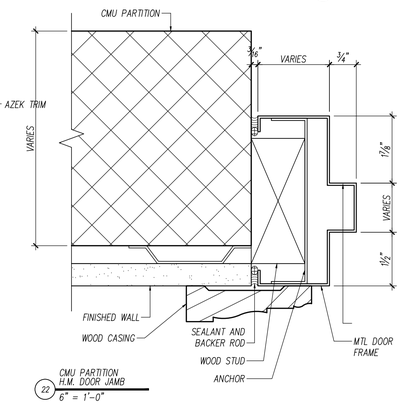

22 CMU PARTITION H.M. DOOR JAMB
6" = 1'-0"

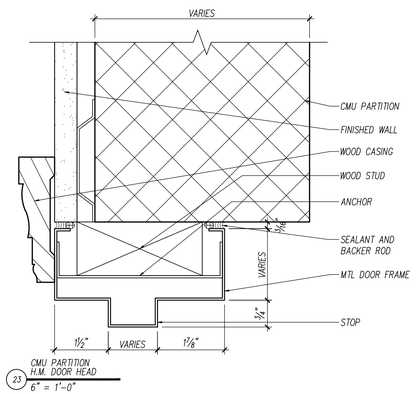

23 CMU PARTITION H.M. DOOR HEAD
6" = 1'-0"

1 DOOR DETAILS
6" = 1'-0"

JC BT
ARCHITECT
585 WASHINGTON STREET, QUINCY, MA 02169
ADMIN@JCBTARCHITECT.COM
TEL: (617) 404-8182

CONSULTANT

REGISTRATION

REGISTERED ARCHITECT JIM CHEN No. 51071 QUINCY, MA COMMONWEALTH OF MASSACHUSETTS

04/01/2020

REVISIONS

NO.	BY	DESCRIPTION	DATE

PROJECT

POND STREET RESIDENCES

12 POND STREET
ASHLAND, MA 01721
JCBT PROJECT # 20007

SHEET TITLE
DOOR FRAME DETAILS

DRAWN:
SCALE: NOTED
DATE:
CHECKED:
SHEET OF

DRAWING NO:
A-701

WINDOW SCHEDULE

NO.	UNIT SIZE		MATERIAL	DETAILS			REMARKS
	OVERALL WIDTH	OVERALL HEIGHT		head	jamb	sill	
A	3'-0"	5'-5"	VINYL				DOUBLE-HUNG WINDOW
A1	3'-0"	5'-5"	VINYL				DOUBLE-HUNG WINDOW @ BATHROOM (TEMPERED GLASS)
B	2'-0"	5'-5"	VINYL				DOUBLE-HUNG WINDOW

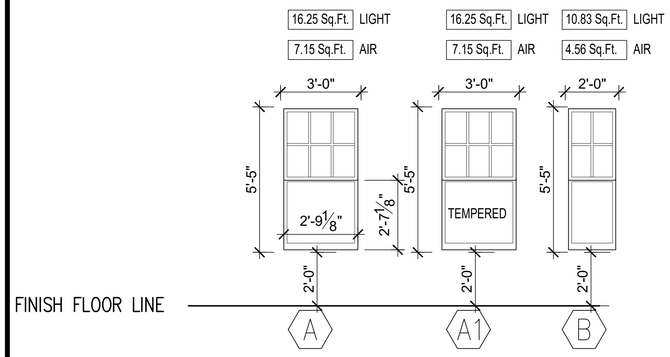

1 WINDOW ELEVATIONS
SCALE: 3/8" = 1'-0"

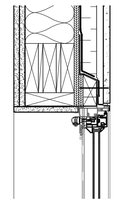

2 WINDOW HEAD DETAIL
SCALE: 1-1/2" = 1'-0"

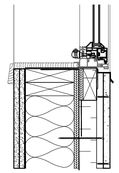

3 WINDOW SILL DETAIL
SCALE: 1-1/2" = 1'-0"

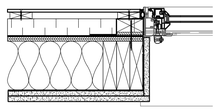

4 WINDOW JAMB DETAIL
SCALE: 1-1/2" = 1'-0"

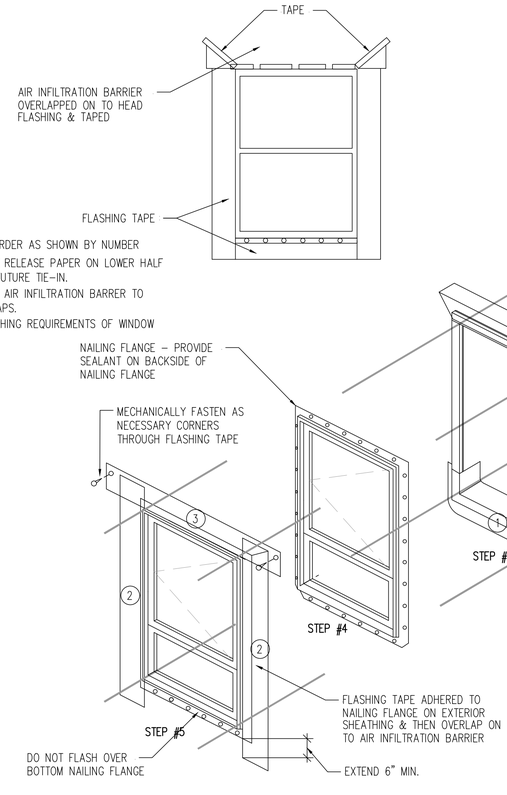

5 WINDOW INSTALLATION DIAGRAM
SCALE: NOT TO SCALE

WINDOW NOTES:
1. WINDOW CATALOG AND REFERENCES NOTED UNDER REMARKS AND UNIT DIMENSIONS NOTED REFER TO ALUMINUM WINDOWS BY HARVEY WINDOWS ARE USED TO ESTABLISH REFERENCE STANDARD FOR GLASS SIZE, SASH OPERATION AND DETAIL. SUBSTITUTION OF MANUFACTURER TO BE APPROVED BY ARCHITECT.

2. DETAILS REFERENCED IN DRAWINGS ADDRESS TYPICAL INSTALLATION CONDITIONS. REFER TO ELEVATIONS AND SECTIONS FOR SPECIFIC TRIM CONDITIONS.

3. SEE EXTERIOR WALL SECTIONS AND DETAILS FOR HEAD, JAMB AND SILL CONDITIONS.

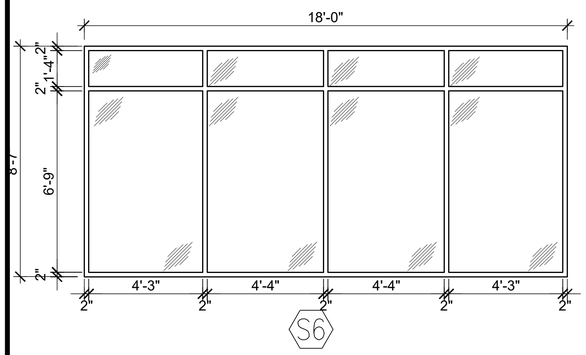

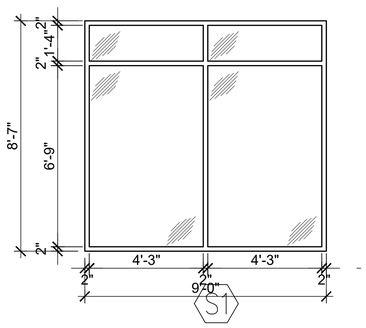

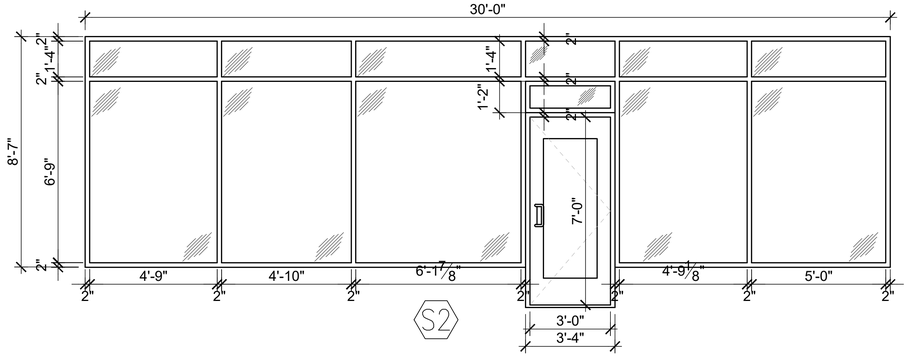

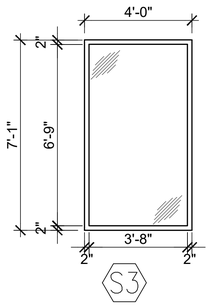

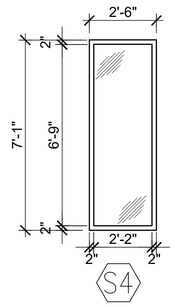

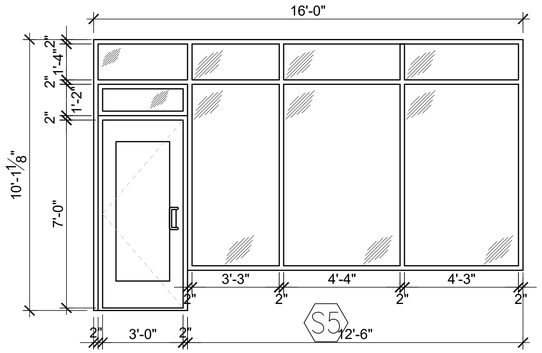

6 WINDOW ELEVATIONS
SCALE: 3/8" = 1'-0"

JCBT ARCHITECT
585 WASHINGTON STREET, QUINCY, MA 02169
ADMIN@JCBTARCHITECT.COM
TEL: (617) 404-8182

CONSULTANT

REGISTRATION



04/01/2020

REVISIONS

NO.	BY	DESCRIPTION	DATE

PROJECT

POND STREET RESIDENCES

12 POND STREET
ASHLAND, MA 01721
JCBT PROJECT # 20007

SHEET TITLE
WINDOW SCHEDULES

DRAWN:
SCALE: NOTED
DATE:
CHECKED:
SHEET OF

DRAWING NO:
A-702

FINISH SCHEDULE

ROOM NO.	ROOM NAME	FLOOR: RUBBER	HARDWOOD	CARPET	GRANITE TILE	CERAMIC TILE	VCT	SEALED CONCRETE	BASE: WOOD BASE	4" VINYL	CEILING: EXPOSED CEILING	PAINTED GWB	SUSPENDED GWB CEILING	WALLS: EXPOSED CONCRETE	EXPOSED CMU	PAINTED GWB	WOOD WAINSCOT	TRIM: WOOD CHAIR RAIL #8630 (BROSCO)	CROWN MOULDING #8623 (BROSCO)	DOOR WINDSOR 3 1/2"	WINDOW WINDSOR 3 1/2"	REMARKS
	GARAGE LEVEL																					
G01	GARAGE ROOM							X					X	X	X							WATERPROOF SEAL @ GARAGE FLOOR SUSPENDED CEILING, UL SYSTEM G523, SEE A-301
G02	MECHANICAL ROOM							X			X			X	X							GAS METER, WATER METER, SPRINKLER
G03	ELEVATOR MACHINE ROOM							X			X			X	X							
G04	ELECTRICAL ROOM							X		X		X				X				X		INSTALL TRIM ONLY ON CORRIDOR SIDE
G05	BIKE STORAGE ROOM							X		X		X				X				X		
G06	FIRE SPRINKLER ROOM							X		X		X				X				X		
G07	MAIN LOBBY			X					X			X				X			X	X		
	PUBLIC SPACES: 1ST – 3RD FLOOR																					
	VESTIBULE			X					X			X				X		X	X	X	X	
	LOBBY			X					X			X				X		X	X	X		
	OFFICE SPACE			X					X			X				X		X	X	X		
S-1	PUBLIC STAIRS			X						X		X				X				X		INSTALL TRIM ONLY ON CORRIDOR SIDE
S-2	PUBLIC STAIRS			X						X		X				X				X		INSTALL TRIM ONLY ON CORRIDOR SIDE
100-400	CORRIDORS: 1ST – 4TH FLOORS			X					X			X				X		X				GLUE DOWN CARPET, NO PAD
EL-1	ELEVATOR			X																		WALLS AND CEILING OF CAB TO BE SELECTED BY ARCHITECT FROM MANUFACTURERS FULL RANGE OF FINISH SELECTIONS
K-5	KITCHENETTE					X			X			X				X				X		
B-3, B-4	FIRST FLOOR BATHROOMS					X			X			X				X				X		
	UTILITY CLOSET						X			X		X				X				X		PROVIDE ACCOUSTICAL INSULATION @ CEILING INSTALL TRIM ONLY ON CORRIDOR SIDE

GENERAL NOTES:

1. ANY UNSCHEDULED RESIDENTIAL SPACE SHALL RECEIVE THE FINISH OF NEAREST SIMILAR HABITAL SPACE.
2. ANY UNSCHEDULED PUBLIC SPACE TO RECEIVE FINISH OF SCHEDULED SPACE OF SIMILAR FUNCTION.
3. COMPLY WITH ALL APPLICABLE CODES REGARDING CONSTRUCTION FOR WALL AND CEILING FIRE RATINGS.
4. METAL EDGE AT VCT TRANSITION.

1 FINISHES SCHEDULE
1/4" = 1'-0"

FINISH SCHEDULE

ROOM NO.	ROOM NAME	FLOOR: RUBBER	HARDWOOD	CARPET	GLUE DOWN CARPET, NO PAD	CERAMIC TILE	VCT	SEALED CONCRETE	BASE: WOOD BASE	4" VINYL	CEILING: EXPOSED CEILING	PAINTED GWB	2 X 4 LAY IN CEILING	WALLS: EXPOSED CONCRETE	EXPOSED CMU	PAINTED GWB	STONE	WOOD WAINSCOT	CERAMIC TILE	TRIM: WOOD CHAIR RAIL #8630 (BROSCO)	CROWN MOULDING #8623 (BROSCO)	DOOR WINDSOR 3 1/2"	WINDOW WINDSOR 3 1/2"	REMARKS
	MARKET RATE UNITS:																							
-	KITCHEN					X			X			X				X								WOOD BASE @ EXPOSED WALLS ONLY
-	LIVING SPACE			X					X			X				X					X	X	X	
-	ENTRY CLOSET			X					X			X				X						X		TRIM ONLY OUTSIDE
-	BEDROOM			X					X			X				X						X	X	
-	BATHROOM					X			X			X				X						X		TUB WITH CURTAIN ROD
-	WALK-IN CLOSET			X					X			X				X						X		
-	LINEN CLOSET			X					X			X				X						X		TRIM ONLY OUTSIDE
-	BEDROOM CLOSET			X					X			X				X						X		TRIM ONLY OUTSIDE
-	LAUNDRY						X		X			X				X						X		FLOOR TILE UP TO METAL PAN AT FLOOR, TRIM OUTSIDE ONLY
-	UTILITY CLOSET						X			X		X				X						X		PROVIDE ACCOUSTICAL INSULATION @ CEILING
	AFFORDABLE UNITS																							
-	KITCHEN					X			X			X				X								WOOD BASE @ EXPOSED WALLS ONLY
-	LIVING SPACE			X					X			X				X						X	X	
-	ENTRY CLOSET			X					X			X				X						X		TRIM OUTSIDE ONLY
-	BEDROOMS			X					X			X				X						X	X	
-	BATHROOMS				X				X			X				X						X		SURROUND WITH CURTAIN ROD
-	BEDROOM CLOSET			X						X		X				X						X		TRIM OUTSIDE ONLY
-	LAUNDRY						X			X		X				X						X		
-	UTILITY CLOSET						X			X		X				X						X		PROVIDE ACCOUSTICAL INSULATION @ CEILING

JC BT ARCHITECT
585 WASHINGTON STREET, QUINCY, MA 02169
ADMIN@JCBTARCHITECT.COM
TEL: (617) 404-8182

CONSULTANT

REGISTRATION

COMMONWEALTH OF MASSACHUSETTS REGISTERED ARCHITECT JIAN CHEN No. 51071 QUINCY, MA

04/01/2020

REVISIONS

NO.	BY	DESCRIPTION	DATE

PROJECT

POND STREET RESIDENCES

12 POND STREET
ASHLAND, MA 01721
JCBT PROJECT # 20007

SHEET TITLE: FINISH SCHEDULES

DRAWN:
SCALE: NOTED
DATE:
CHECKED:
SHEET OF

DRAWING NO: A-703

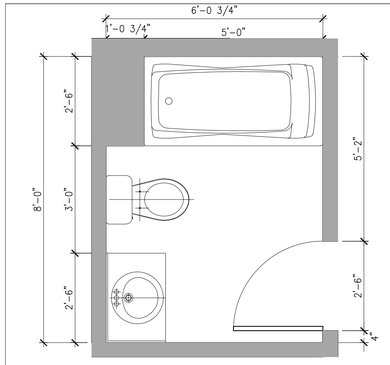

B1 B-1: TYPE-A BATHROOM PLAN
1/2" = 1'-0"

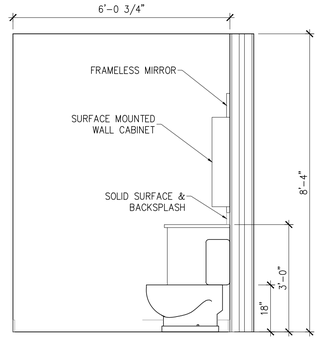

1 INTERIOR ELEVATION
1/2" = 1'-0"

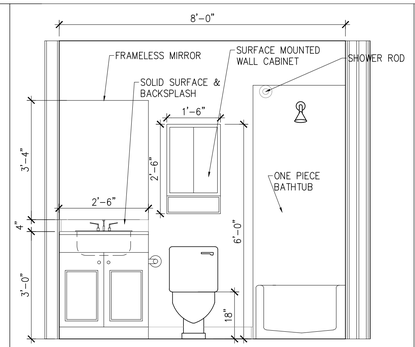

2 INTERIOR ELEVATION
1/2" = 1'-0"

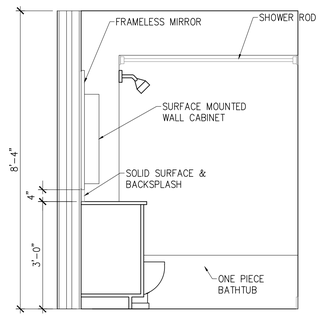

3 INTERIOR ELEVATION
1/2" = 1'-0"

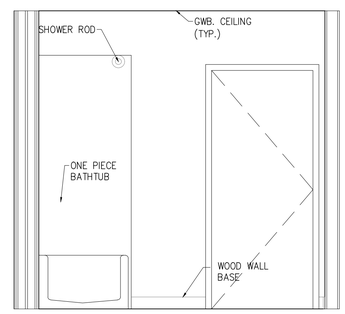

4 INTERIOR ELEVATION
1/2" = 1'-0"

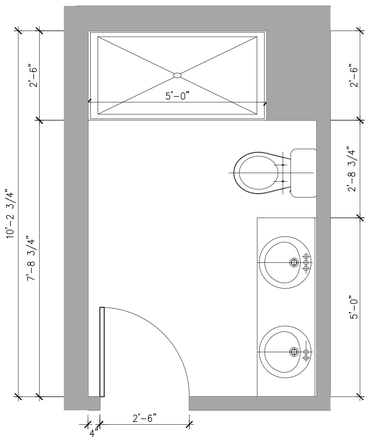

B2 B-2: TYPE-B BATHROOM PLAN
1/2" = 1'-0"

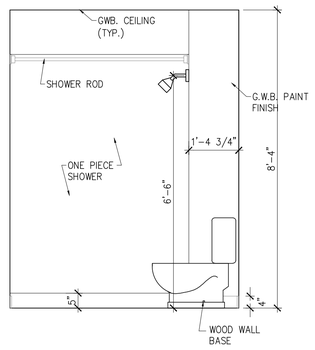

5 INTERIOR ELEVATION
1/2" = 1'-0"

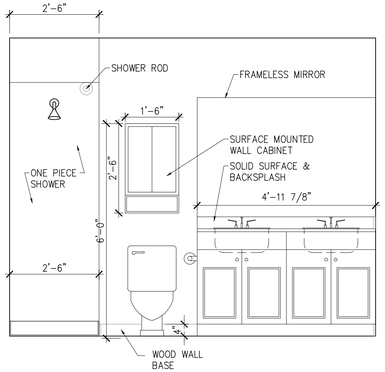

6 INTERIOR ELEVATION
1/2" = 1'-0"

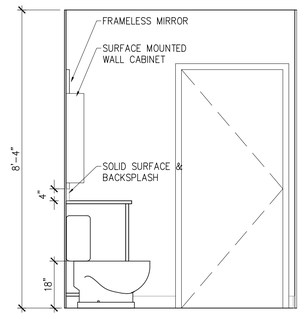

7 INTERIOR ELEVATION
1/2" = 1'-0"

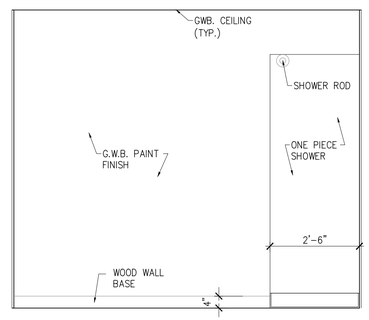

8 INTERIOR ELEVATION
1/2" = 1'-0"

JC BT
ARCHITECT
585 WASHINGTON STREET, QUINCY, MA 02169
ADMIN@JCBTARCHITECT.COM
TEL: (617) 404-8182

CONSULTANT

REGISTRATION

REGISTERED ARCHITECT
JIM CHEN
No. 51071
QUINCY, MA
COMMONWEALTH OF MASSACHUSETTS

04/01/2020

REVISIONS

NO.	BY	DESCRIPTION	DATE

PROJECT

POND STREET RESIDENCES

12 POND STREET
ASHLAND, MA 01721
JCBT PROJECT # 20007

SHEET TITLE

BATHROOM TYPE PLANS & ELEVATIONS

DRAWN:
SCALE: NOTED
DATE:
CHECKED:
SHEET OF

DRAWING NO:

A-801

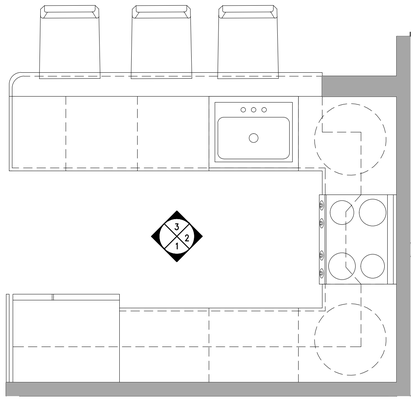

K1 K-1: KITCHEN TYPE A PLAN
1/2" = 1'-0"

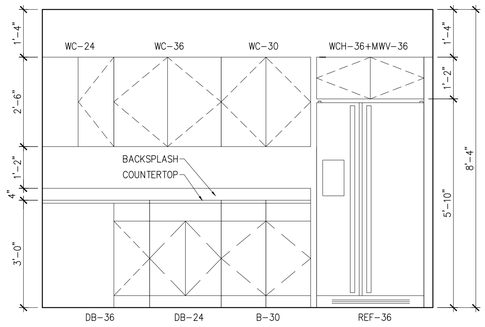

1 INTERIOR ELEVATION
1/2" = 1'-0"

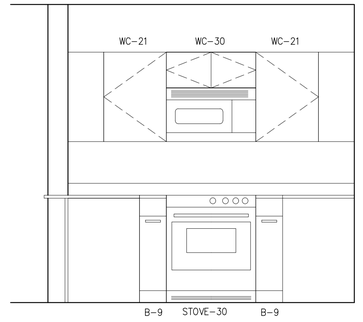

2 INTERIOR ELEVATION
1/2" = 1'-0"

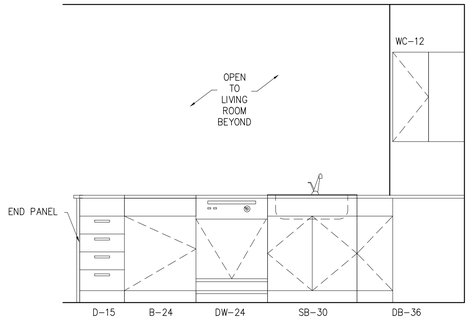

3 INTERIOR ELEVATION
1/2" = 1'-0"

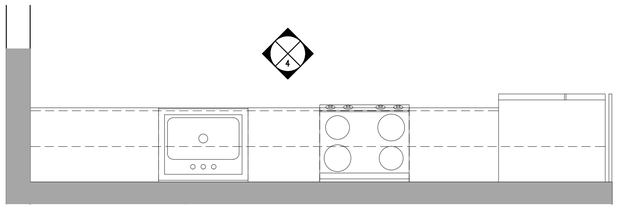

K2 K-2: KITCHEN TYPE B PLAN
1/2" = 1'-0"

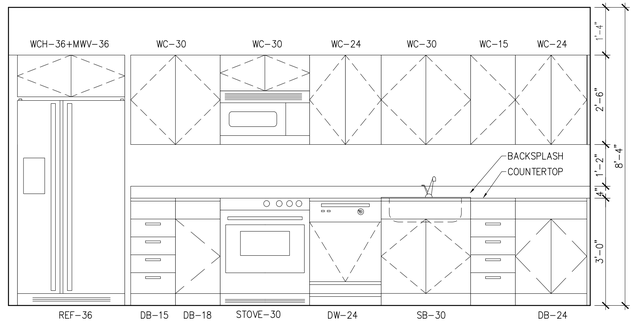

4 INTERIOR ELEVATION
1/2" = 1'-0"

GENERAL NOTES:
*GENERAL CONTRACTOR IS RESPONSIBLE FOR COORDINATING WITH KITCHEN SUPPLIER AND TO PROVIDE INSTALLATION OF BLOCKING, WHERE REQUIRED.

JC BT
ARCHITECT
585 WASHINGTON STREET, QUINCY, MA 02169
ADMIN@JCBTARCHITECT.COM
TEL: (617) 404-8182

CONSULTANT

REGISTRATION



04/01/2020

REVISIONS

NO.	BY	DESCRIPTION	DATE

PROJECT

POND STREET RESIDENCES

12 POND STREET
ASHLAND, MA 01721
JCBT PROJECT # 20007

SHEET TITLE
KITCHEN PLANS & ELEVATIONS

DRAWN:
SCALE: NOTED
DATE:
CHECKED:
SHEET OF

DRAWING NO:
A-802

GENERAL:

G–1 Structural drawings shall be used in conjunction with the architectural, mechanical, electrical and shop drawings, and specifications.

G–2 All dimensions and conditions must be verified in the field by the Contractor. Any discrepancies shall be brought to the attention of the structural engineer before proceeding with the affected portion of the work. Any discrepancies between these drawings and as–built conditions shall be brought to the attention of the Structural Engineer before proceeding with any work.

G–3 Shop drawings for reinforcing steel (including accessories), structural steel, open web steel joists, and steel decking shall be submitted to the Structural Engineer. Fabrication shall not proceed until a stamped review is received. Erection shall be executed from final reviewed shop drawings only.

G–4 A complete concrete placement schedule shall be submitted to the Structural Engineer and a stamped acceptance received before any concrete placement can be made.

G–5 Unless otherwise noted, details shown on any drawings are to be considered typical for all similar conditions.

G–6 In the event of a conflict between plans, specifications, and details, the engineer shall be notified immediately for clarification.

G–7 If conditions at the site are different than shown the engineer shall be notified prior to proceeding with the affected work.

G–8 These plans were prepared under the supervision of a licensed professional engineer. TFMoran, Inc. assumes no liability as a result of any changes or non–conformance with these plans except upon the written approval of the Engineer of Record.

G–9 TFMoran, Inc. assumes no liability for work performed without an acceptable program of testing and inspection as approved by the Engineer of Record.

G–10 Reproduction of Structural Drawings for shop drawings is not permitted. Electronic drawing files will not be provided to the Contractor unless the Structural Engineer is compensated for the files.

G–11 Sections, details, notes, methods, or materials shown and/or noted on any plan, section, or elevation shall apply to all other similar locations unless noted otherwise.

G–12 The contractor shall be responsible for all shoring and bracing required during construction. Temporary supports required for stability during all intermediate stages of construction shall be designed, furnished, and installed by the Contractor.

CODE:

Massachusetts State Building Code Eigth Edition and the referenced standards included therein.

DESIGN LIVE LOADS:

D–1 UNIFORM FLOOR LIVE LOADS:

Private Living Areas:	40 psf
Public Areas and Corridors Serving them:	100 psf
Stairways;	100 psf
Decks (Public):	100 psf
Parking Garage:	50 psf

D–2 CONCENTRATED FLOOR LOADS: (distributed over an area of 2½ square feet)

General:	2,000 lbs

D–3 ROOF SNOW LOAD:

Ground Snow Load:	40 psf
Snow Exposure Factor, Ce:	1.0
Snow Load Importance Factor, I:	1.0
Thermal Factor, Ct:	1.0
Flat Roof Snow Load, Ps:	30 psf (Minimum)
Plus Drifting & Unbalanced Snow Loads Per ASCE–7	

D–4 WIND LOADS:

Basic Wind Speed, (3 second gust) V:	100 mph
Wind Importance Factor, I:	1.0
Building Category:	II
Wind Exposure Category:	B
1609.6 Simplified Provision for Low Rise Buildings	
Components and Cladding Design Wind Pressure:	27 psf (10 s.f.)

D–5 SEISMIC LOAD:

0.2s Spectral Response Acceleration:	Ss=0.283g
1.0s Spectral Response Acceleration:	S1=0.068g
Seismic Use Group/Category:	II
Spectral Response Coefficient:	Sds=0.297g
Spectral Response Coefficient:	Sd1=0.109g
Site Class:	D
Seismic Design Category:	B
Basic seismic–force–resisting system:	Light–framed wall sheathed with wood structural panels rated for shear resistance
Analysis Procedure:	Equivalent Lateral Force
Response modification factor:	R=6
Deflection amplitude factor:	Cd=6
Seismic Base Shear:	39.5 KIPS

MASONRY:

M–1 Concrete masonry units (CMU) shall be nominal thickness unless noted otherwise on the contract drawings.

M–2 Masonry construction shall conform to Building Code Requirements for Masonry Structures (ACI 530–05/ASCE 5–05/TMS 402–05), .

M–3 Specified masonry compressive strength, f'm= 1,500 psi – Inspected.

M–4 Hollow load bearing concrete masonry units shall have the following properties: ASTM C90, Type 1, Grade N–1 (normal weight) with a minimum compressive strength of 2,000 psi according to ASTM C140, oven dry weight over 125 pcf and maximum moisture absorption of 13 pcf.

M–5 Mortar shall be ASTM C270, Type S with 28 day compressive strength of 2,000 psi. Mix mortar materials to produce mortar cubes having a 2,000 psi compressive strength when tested in accordance with compressive strength test ASTM C780

M–6 Grout shall be ASTM C476, fine grout with minimum 28 day compressive strength of 2,000 psi.

M–7 Vertical and horizontal deformed reinforcement shall be ASTM A615 grade 60 and horizontal joint reinforcement shall be ASTM A82, galvanized according to ASTM A641 Class 1 as specified.

M–8 Prism tests according to ASTM E447 are required prior to work.

M–9 Grout CMU solid at expansion anchor locations.

M–10 Cores and bond beams with reinforcing shall be filled solidly with grout. Filling such cores and bond beams with mortar is strictly prohibited. In addition, care shall be exercised in keeping cores free from mortar droppings.

M–11 Minimum reinforcing requirements for reinforced CMU walls shall conform to the schedule shown on the contract drawings and the applicable building code requirements.

M–12 Grout shall be placed using low or high lift grouting procedures conforming to ACI/ASCE. Terminate grout pours 1–1/2 inches below top course of placement. Reinforcing shall be spliced a minimum of 40 bar diameters.

M–13 Vertical reinforcing shall be securely held in proper alignment and position during grouting operations by using "Rebar Positioners," as manufactured by Wire Bond or approved equal. The product, in addition, shall allow for guiding the spliced reinforcing dropped from the top of the lift.

M–14 Masonry shall be braced during construction. Brace spacing shall not exceed ten times the wall thickness but not less than the procedures listed under NCMA–TEK 72.

M–15 Provide full height vertical reinforcement at each side of control joints, window, door, and wall openings, at all ends of walls and corners. Reinforcing shall be grouted solid and match the diameter of the typical wall reinforcing.

METAL DECK:

MD–1 Galvanized metal deck shall be formed of steel sheets conforming to ASTM A611. Galvanized coating shall conform to ASTM Specification A 525–G60.

MD–2 2" deep, 20 gage galvanized composite floor steel deck shall have the following minimum properties per foot:

I = 0.420 in4
Sp = 0.367 in3
Sn = 0.387 in3

MD–3 Unless otherwise noted, weld composite floor deck 12 inches on center to all structural supports with 5/8 inch or larger puddle welds. Weld deck around openings at 6 inches on center. Screw side lap joints at 24 inches maximum on center.

MD–4 Unless otherwise noted, weld roof deck sheets 12 inches on center to all structural supports with 5/8 inch or larger puddle welds. Weld deck around openings, along braced frame column lines, and around the building perimeter at 6 inches on center including the sides of the deck. Provide sidelap screws at 1/3 points of the deck span (2 screws per span).

MD–5 Size, location, and details of openings in metal deck shall be coordinated with the architectural, structural, and mechanical drawings.

STRUCTURAL STEEL:

SS–1 Fabricate and erect structural steel in accordance with the "Specification for Structural Steel Buildings – Allowable Stress Design and Plastic Design," and the "Code of Standard Practice" of the AISC. Welding shall conform to the requirements of the "Structural Welding Code" of the American Welding Society.

SS–2 Structural steel wide flange shapes shall conform to ASTM A992. Structural steel channels shall conform to ASTM A572, Grade 50. Structural tube columns shall be ASTM A500, Grade B. Structural steel plates, and angles shall conform to ASTM A36, unless otherwise noted.

SS–3 Do not splice structural steel members without written approval of the Structural Engineer.

SS–4 Bolted connections shall be made with three–quarter inch diameter high strength, ASTM A325–N bolts, unless otherwise noted. Connections at beam to column connections, moment connections, braced frames, column splices and hangers shall be made with three–quarters inch diameter A325–SC (Slip critical) bolts, unless otherwise noted.

SS–5 All beam to column connections shall be double angle connections.

SS–6 Shop connections, unless otherwise noted, shall be welded. Unless otherwise noted, beam connections shall provide shear capacity to support a reaction R equal to the full total uniform load capacity of the beam for given shape, span and steel specification (AISC) taking account for the effect of concentrated loads.

SS–7 The following factors shall be applied to the composite beam end reactions determined from the uniform load capacity of the beam (noted above), for the design of the shear connections:

F=1.3:	F=1.5:	F=1.7:	F=2.0:
W36	W27	W18	W12
W30	W24	W16	W10
	W21	W14	W8

SS–8 Shop camber steel beams as shown on the drawings. Camber tolerance shall be –0" or +1/2". Camber shall be measured with beam web vertical (erected condition) under its own dead load.

SS–9 Anchor bolts shall be ASTM F1554 Gr. 36 headed bolts of the diameters and dimensions detailed, unless otherwise noted on the drawings. Anchor bolts shall be set by template. High strength (HS) anchor bolts shall be ASTM A449 Gr. 105 headed bolts.

SS–10 Welding electrodes shall conform to AWS A5.1 E70XX series with proper rod to produce optimum weld (low hydrogen).

SS–11 Unless otherwise noted, bolted connections with slotted holes shall be field–welded with one–quarter inch fillet welds after final field adjustment.

SS–12 Provide 3/8" minimum fitted stiffener plates each side at beams' web framing over columns and at beams supporting columns above.

SS–13 Provide 1/4" thick leveling plate under all column base plates unless otherwise noted. Leveling plates shall be set and grouted prior to erecting columns.

STRUCTURAL STEEL (cont.):

SS–14 Provide all angles, plates, anchors, bolts, etc., shown on architectural drawings.

SS–15 Lintels for exterior masonry and structural steel exposed to weather shall be hot–dip galvanized according to ASTM A123.

SS–16 Provide L4x4x¼ slab support angle as required at columns where structural members do not frame in at all four sides.

SS–17 Steel Primer:

A. Architecturally exposed steel: Shop prime with Tnemec Series 90–1K97 Tneme–Zinc at 2.5 – 3.5 mils DFT. Intermediate coat of Tnemec Series 27 Typoxy at 2–3 mils DFT. Topcoat of Tnemec Series 73 and 2–3 mils DFT. Tnemec shall be used as the standard of quality and performance.

B. General Primer: Standard Alkyd Primer applied at 2.5 – 3.5 mil DFT shall be used as the standard of quality and performance. Color: grey

C. Primer for steel with fireproofing: Tnemec Series 394 Perime–Prime applied at 2.5 – 3.5 mils DFT shall be used as the standard of quality and performance.

SS–18 The Steel fabricator is responsible for the design and detailing of all connections including moment connections and beam and/or column stiffeners and doublers if required.

SHEAR STUD PLACEMENT:

SP–1 At beams (deck is perpendicular to beam) where there are more studs than ribs, place a double (or triple, if required) row of studs starting at each end of the beam and working toward the center. There should be at least one stud per rib before a double row is required and two studs per rib before a triple row is required.

SP–2 At beams where there are fewer studs than ribs, place one stud at every third rib and then fill in empty ribs starting at each end of the beam, and working towards the center.

SP–3 In general, if studs cannot be placed with a uniform spacing along the beam, the greatest number of studs should occur at the ends of the beam, with an equal number of studs on each side of the centerline of the beam.

SP–4 At girders (deck is parallel to beam), place the first stud approximately 12" from the column centerline and work toward the center with uniform spaces between studs. Where stud patterns are noted on the drawings, place the number of studs indicated with a uniform spacing between the beams framing to the girder.

SP–5 If a double (or triple) row of studs is required, place the studs in a staggered pattern rather than side by side.

SP–6 Where no studs are specifically noted on plan, provide studs at 24"o.c. on all steel beams supporting composite floor slabs.

WOOD:

W–1 Work shall be in accordance with the American Wood Council, ANSI/AF&PA, "National Design Specification for Wood Construction 2005 (NDS)" including "Design Values for Wood Construction", National Forest Products Association.

W–2 New wood for structural use shall have a moisture content as specified in the "National Design Specification for Wood Construction."

W–3 Wood construction shall conform to IBC 2009 Chapter 23 and Section 2308 "Conventional Light–frame Construction."

W–4 Framing for walls and joists shall be Spruce–Pine–Fir No. 1/No. 2 or better. Dimensioned lumber represents nominal sizes.

W–5 Sheathing panels shall be marked with the American Plywood Association (APA) trademark and shall meet the latest U.S. Product Standard PS 1 or APA PRP–108 Performance Standards.

W–6 All wall sheathing panels shall be ½" thick 32/16, APA Rated (Block all edges) u.n.o. Fasten with 8d common nail spaced at 6"o.c. at panel perimeter supported egdes and 12"o.c. at interior intermediate supports(field). 1⅜" min. fastener penetration. Lay wall sheathing with long dimension perpendicular to support members. All exterior wall sheathing to be Fire Retardant Treated. Fasteners at FRT plywood to be Galvanized, stainless steel or approved equal. Fasteners to comply with requirements of IBC section 2304.9.5.

W–7 All roof sheathing panels shall be ⅝" thick u.n.o., C–D Exterior grade, APA rated Exposure 1 meeting DOC PS1 or PS2. Fasten with 8d common nails spaced at 6"o.c. at panel perimeter supported egdes and 6"o.c. at interior intermediate supports (field). 1⅜" min. fastener penetration. Lay roof sheathing with long dimension perpendicular to support members.

W–8 Wood to steel and wood to wood bolted connectors shall be made with ASTM A307 bolts with flat washers. Bolt holes in wood shall be 1/32" larger than the bolt. Wood nailers shall be fastened with 3/8"ø bolts staggered at 2'–0" o.c. unless otherwise noted.

W–9 Fastening Schedule:

Plate to Stud, Direct	2–16d
Stud to Plate, Toenail	4–8d

NOTE: SEE IBC 2009, TABLE 2304.9.1 "FASTENING SCHEDULE" FOR FASTENING/NAILING REQUIREMENTS NOT SHOWN.

W–10 Wood in Contact with concrete or masonry shall be pressure treated (P.T.) or approved equal.

W–11 The lateral bracing system includes plywood wall and roof sheathing. Contractor shall provide temporary bracing as required to laterally support the structure during construction.

W–12 LVL's shall be 1.9E Trusjoist Microllam as manufactured by Weyerhaeuser or approved equivalent. Minimum properties include:

Modulus of Elasticity, E	= 1.9e6	psi
Flexural Stess, Fb	= 2,600	psi
Horizontal Shear, Fv	= 285	psi

W–13 Provide lateral support at all bearing points and along compression edges at intervals of 24"o.c. or closer.

W–14 Minimun section width = 1 3/4". 3 1/2", 5 1/4", and 7" members may be combinations of 1 3/4" members. Follow manufacturers guidelines for Multiple Member Connections for side loaded beams.

W–15 Wood Construction Connectors shall be manufactured by Simpson Strong–Tie Co., Inc. and installed in accordance with the manufacturers recommendations.

PRE–ENGINEERED WOOD TRUSSES:

WT–1. All pre–engineered wood trusses shall conform to ANSI/TPI1–2002 "National Design Standards for Metal Plate Connected Wood Truss Construction."

WT–2. The manufacturer of the pre–engineered trusses shall be a Truss Plate Institute (TPI) certified plant. Proof of certification shall be submitted to the Engineer prior to fabrication of the wood trusses.

WT–3. The contractor shall ensure proper handling, bracing, and lateral restraint in accordance with the manufacturer's recommendations. All temporary and permanent truss bracing shall be designed by the truss manufacturer and installed by the contractor. All permanent truss bracing\lateral restraint requirements and locations shall be detailed and submitted prior to construction to the Engineer of Record by the truss manufacturer. Alternatively, the truss designer may design all trusses such that no permanent lateral restraint is required.

WT–4. All Roof trusses shall be designed for the following uniform loads with 5½" max of bearing:

Snow Live Load	30 psf (horizontal roof applied)
Deck and Corridor Load (where sown on plans)	100 psf
Top Chord Dead Load	15 psf
Bottom Chord Dead Load	5 psf

Design all roof trusses for L/360 total load and L/480 live load.

Trusses shall be designed for an unbalanced uniform snow loading as well as any drifted or valley snow loadings conditions, and wind loading as specified in the project building code.

WT–5. All Floor trusses shall be designed for the following uniform loads with 5½" max of bearing:

See Note D–1 for Live Loads:	-----
Top Chord Dead Load	20 psf
Bottom Chord Dead Load	5 psf

Design all floor trusses for L/240 total load and L/360 live load.

WT–6. Pre–engineered roof trusses to be approved by the Structural Engineer. All truss submittals shall be in accordance with section 2303.4 of IBC 2009. Truss shop drawings shall be designed, stamped and submitted by a licensed professional engineer qualified to perform the work in the state where the project is located. Submittal shall include all loading combinations, a full report for each truss and temporary and permanent lateral truss restraint layout and details.

WT–7. The contractor shall verify the location of all vents, stacks, risers, drains, etc. before trusses are fixed in place.

WT–8. All trusses shall have hurricane clips installed at each end of each truss. See details for hurricane clip information.

WT–9 All truss to truss connection designs are the responsibilty of the truss manufacturer.

WT–10 All temporary and permanent truss bracing is the responsibility of the truss designer. Bracing and lateral truss restraint (including details) shall be shown on truss design drawings and truss erection drawings.

STRUCTURAL TESTS AND INSPECTIONS:

T–1 Structural Tests, Inspections, and Reports for concrete construction, steel construction, masonry construction, soils, pier foundations, and other applicable construction shall be promptly submitted in writing to the Structural Engineer and Contractor.

T–2 Tests and Inspections shall be completed in accordance to IBC 2006, Section 1704 Special Inspections. Refer to Statement of Special Inspections/Quality Assurance Plan issued with final construction documents for the required program of special inspections for each building material/system.

T–3 Remove and replace work where test results indicate that it does not comply with specified requirements. Additional testing and inspecting, at Contractor's expense, will be performed to determine compliance of replaced or additional work with specified requirements.

T–4 Concrete Masonry Units (CMU), Mortar, Grout, and Prism Testing:

A. Make 3 specimens for each type of test for each 5,000 square feet of masonry wall.
B. Test each mortar type in conformance with ASTM C780.
C. Test grout in each type of wall construction in conformance with ASTM C1019 using inch grout cubes.
D. Test concrete masonry units (CMU), for each type required, per ASTM C140.
E. Sample and test masonry prisms in conformance with ASTM C1314.
F. Inspect fully grouted, reinforced masonry cores.
G. Test one specimen at 7 days and the remaining two at 28 days.
H. Submit test results to the Architect of Record and Structural Engineer within 7 days. Report unacceptable results within 24 hours.

T–5 Concrete Testing: Testing of composite samples of fresh concrete obtained according to ASTM C 172 shall be performed according to the following requirements:

I. Testing Frequency: Obtain one composite sample for each day's pour of each concrete mixture exceeding 5 cu. yd., but less than 25 cu. yd., plus one set for each additional 50 cu. yd. or fraction thereof. When frequency of testing will provide fewer than five compressive–strength tests for each concrete mixture, testing shall be conducted from at least five randomly selected batches or from each batch if fewer than five are used.
J. Slump: ASTM C 143/C 143M; one test at point of placement for each composite sample, but not less than one test for each day's pour of each concrete mixture. Perform additional tests when concrete consistency appears to change.
K. Air Content: ASTM C 231, pressure method, for normal–weight concrete; one test for each composite sample, but not less than one test for each day's pour of each concrete mixture.
L Concrete Temperature: ASTM C 1064; one test hourly when air temperature is 40 deg F and below and when 80 deg F and above, and one test for each composite sample.
M. Compression Test Specimens: ASTM C 31.
1. Cast and laboratory cure two sets of two standard cylinder specimens for each composite sample.
2. Cast and field cure two sets of two standard cylinder specimens for each composite sample.
N. Compressive–Strength Tests: ASTM C 39; test one set of two laboratory–cured specimens at 7 days and one set of two specimens at 28 days. Test one set of two field–cured specimens at 7 days and one set of two specimens at 28 days.
O. Test results shall be reported in writing to Architect and Engineer, concrete manufacturer, and Contractor within 48 hours of testing. Reports of compressive–strength tests shall contain Project identification name and number, date of concrete placement, name of concrete testing and inspecting agency, location of concrete batch in Work, design compressive strength at 28 days, concrete mixture proportions and materials, compressive breaking strength, and type of break for both 7– and 28–day tests.
P. Additional Tests: Testing and inspecting agency shall make additional tests of concrete when test results indicate that slump, air entrainment, compressive strengths, or other requirements have not been met, as directed by Structural Engineer.
Q. Additional testing and inspecting, at Contractor's expense, will be performed to determine compliance of replaced or additional work with specified requirements.
R. Correct deficiencies in the Work that test reports and inspections indicate dos not comply with the Contract Documents.

ABBREVIATIONS

± = PLUS OR MINUS
@ = AT

AB = ANCHOR BOLT
AFF = ABOVE FINISH FLOOR
ALUM = ALUMINUM
ALT = ALTERNATE
ARCH = ARCHITECTURAL

BM. = BEAM
B.O.F. = BOTTOM OF FOOTING
BOTT. = BOTTOM
BLDG. = BUILDING

CJ = CONTROL JOINT
CL = CENTERLINE
CLR = CLEAR
CMU = CONCRETE MASONRY UNIT
COL. = COLUMN
CONC. = CONCRETE
CONST. = CONSTRUCTION
CONT. = CONTINUOUS
COOR = COORDINATE

ø, DIA. = DIAMETER
DIM = DIMENSION
DIST. = DISTANCE
DW = DOWN
DWGS. = DRAWINGS

(E), EXIST = EXISTING
E.F. = EACH FACE
E.W. = EACH WAY
EXIST. = EXISTING
EA. = EACH
EQ = EQUAL
ELEV. = ELEVATION
EMBED. = EMBEDMENT
EXP. = EXPANSION
EXT = EXTERIOR

FFE = FINISHED FLOOR ELEVATION
FIN. = FINISHED
FLR. = FLOOR
FNDN. = FOUNDATION
FT = FEET
FTG = FOOTING

GA. = GUAGE
GC = GENERAL CONTRACTOR
GALV. = GALVANIZED

HORIZ. = HORIZONTAL
HSS = HOLLOW STRUCTURAL SECTION

IN = INCH
INT = INTERIOR

K = KIP

LB = POUND
LLH = LONG LEG HORIZONTAL
LLV = LONG LEG VERTICAL

MAX. = MAXIMUM
MIN. = MINIMUM
M.O. = MASONRY OPENING
MPH = MILES PER HOUR
MTL. = METAL

#, No. = NUMBER
N.T.S. = NOT TO SCALE

O.C. = ON CENTER
OPNG. = OPENING

PL = PLATE
PLF = POUNDS PER LINEAR FOOT
PSF = POUNDS PER SQUARE FOOT
PSI = POUNDS PER SQUARE INCH
P.T. = PRESSURE TREATED

RAD = RADIUS
REC. = RECOMMENDATION
REINF. =REINFORCE (D\ING)
REQ'D = REQUIRED
REV = REVISION
RO = ROUGH OPENING

SCHD = SCHEDULE
SIM = SIMILAR
S.F. = SQUARE FEET
SPEC = SPECIFICATION
STD. = STANDARD
STIFF. = STIFFENERS
STL. = STEEL

TH. = THICK
T.O.S. = TOP OF STEEL
T.O.W. = TOP OF WALL
T.O.B.S. = TOP OF BRICK SHELF
TYP. = TYPICAL

U.N.O. = UNLESS NOTED OTHERWISE

VB = VAPOR BARRIER
VERT. = VERTICAL
V.I.F. = VERIFY IN FIELD

W/ = WITH
WO = WITHOUT
WS = WATERSTOP
WWF\WWM = WELDED WIRE FABRIC\MESH

General Notes

COMMONWEALTH OF MASSACHUSETTS
ROBERT RICHARD BUSSIERE STRUCTURAL NO. 30393 REGISTERED PROFESSIONAL ENGINEER

No.	Revision/Issue	Date

Firm Name and Address
BUSSIERE STRUCTURAL ENGINEER
342 CANDIA ROAD
MANCHSETER, NH 03109
CONTACT:
ROBERT RICHARD BUSIERE, P.E.

Project Name and Address
MULTI-FAMILY APARTMENT
12 POND STREET
ASHLAND, MA

Project 7814	Sheet S-001
Date 02/25/2020	
Scale As Noted	

These drawings and specifications are the property and copyright of JC Architect and shall not be used in whole or part, or shall be assigned to a third party without the express written permission of JC Architect.

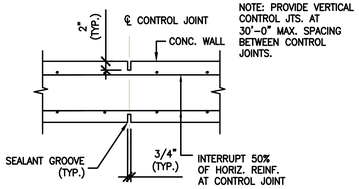

4 CONC. WALL VERT. CONTROL JOINT
SCALE: 3" = 1'-0"

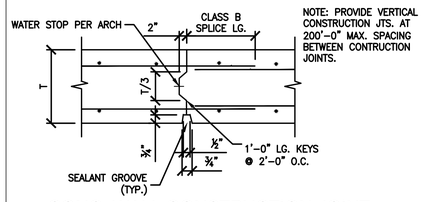

4A CONC. WALL CONSTRUCTION JOINT
SCALE: N.T.S.

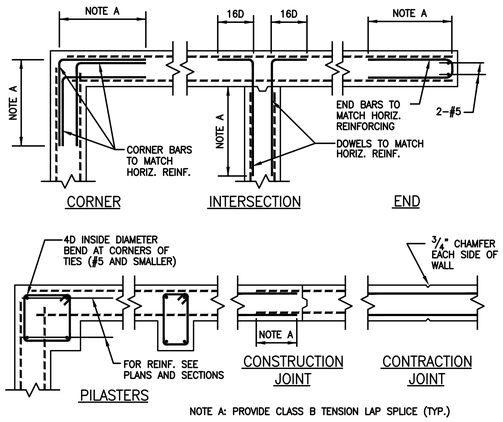

3 TYP. CONCRETE WALL DETAILS
SCALE: N.T.S.

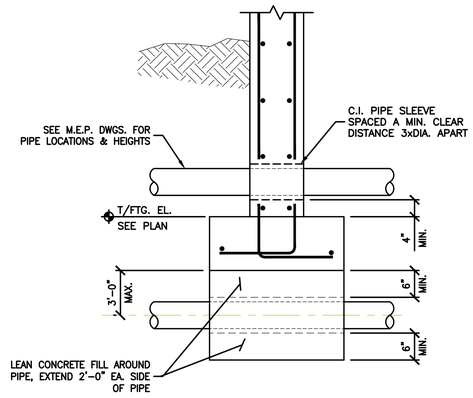

2 TYP. PIPE SLEEVE AT FOUNDATION WALL
SCALE: 3/4" = 1'-0"

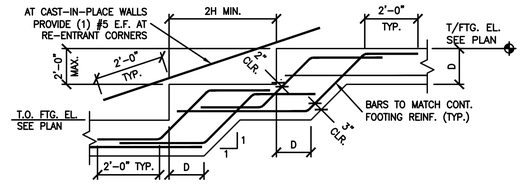

1 TYPICAL STEP IN WALL FOOTING
SCALE: N.T.S.

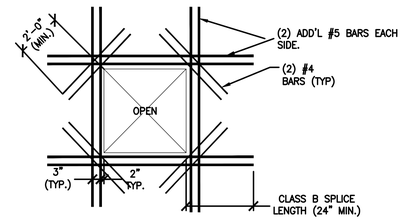

5 TYP. REINF. AT CONC. WALL OPENINGS
SCALE: N.T.S.

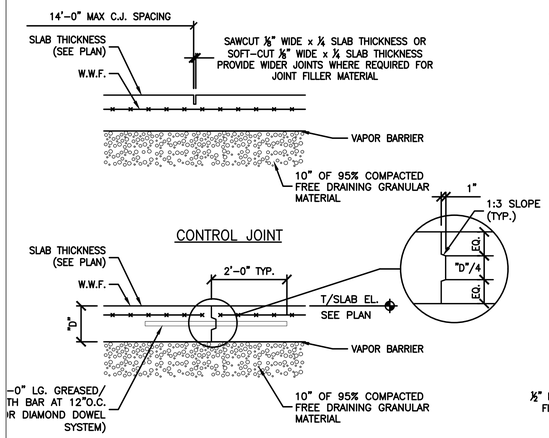

9 TYP. SLAB ON GRADE DETAILS
SCALE: N.T.S.

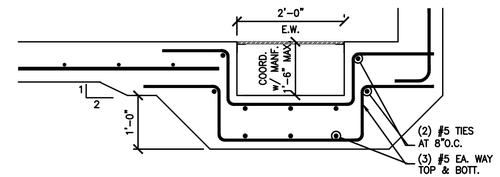

8 TYP. SUMP PIT DETAIL
SCALE: N.T.S.

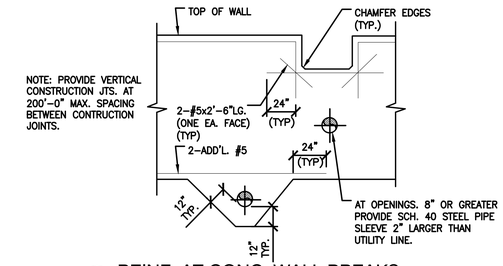

7 REINF. AT CONC. WALL BREAKS
SCALE: N.T.S.

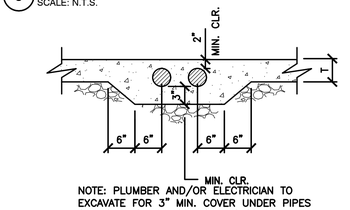

6 TYP. PIPE/CONDUIT IN SLAB DETAIL
SCALE: N.T.S.

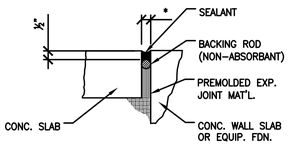

10 TYP. SLAB ISOLATION JOINT
SCALE: N.T.S.

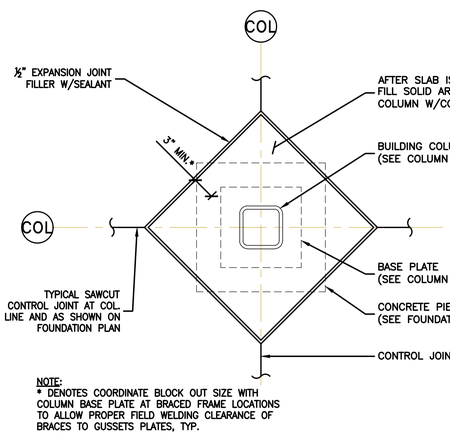

14 TYP. COLUMN ISOLATION DETAIL
SCALE: N.T.S.

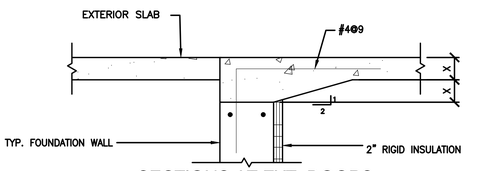

12 SECTIONS AT EXT. DOORS
SCALE: N.T.S.

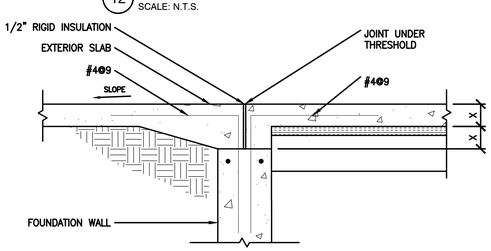

13 SECTIONS AT EXT. DOORS
SCALE: N.T.S.

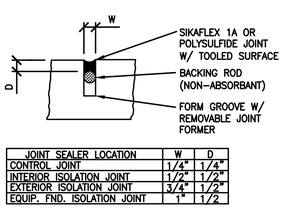

JOINT SEALER LOCATION	W	D
CONTROL JOINT	1/4"	1/4"
INTERIOR ISOLATION JOINT	1/2"	1/2"
EXTERIOR ISOLATION JOINT	3/4"	1/2"
EQUIP. FND. ISOLATION JOINT	1"	1/2

11 SEALANT GROOVE
SCALE: N.T.S.

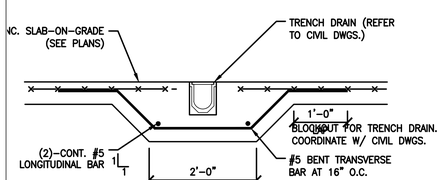

15 TRENCH DRAIN DETAIL
SCALE: 3/4" = 1'-0"

General Notes

No.	Revision/Issue	Date

Firm Name and Address
BUSSIERE STRUCTURAL ENGINEER
342 CANDIA ROAD
MANCHSETER, NH 03109
CONTACT:
ROBERT RICHARD BUSIERE, P.E.

Project Name and Address
MULTI-FAMILY APARTMENT
12 POND STREET
ASHLAND, MA

Project	Sheet
7814	S-002
Date: 02/25/2020	
Scale: As Noted	

These drawings and specifications are the property and copyright of JC Architect and shall not be used in whole or part, or shall be assigned to a third party without the express written permission of JC Architect.

FOUNDATION PLAN NOTES:

1. GARAGE FLOOR REFERENCE ELEVATION = 162.25' (COORDINATE WITH CIVIL DWGS.)
2. FLOOR CONSTRUCTION: CONCRETE FLOOR SLAB THICKNESS AS NOTED (f'c=3,500 PSI) W/WWF 6x6-W2.1xW2.1., SLABS TO BEAR ON A MINIMUM OF 9" STRUCTURAL FILL.
3. BOTTOM OF FOOTING ELEVATION TO BE -4'-0" BELOW FINISHED GRADE UNLESS SHOWN THUS [ ] REFERENCED FROM REFERENCE ELEVATION
4. FOOTINGS TO BE CENTERED ON COLUMN CENTERLINES UNLESS NOTED OTHERWISE.
5. CONCRETE DESIGN MIX TO BE SUBMITTED TO STRUCTURAL ENGINEER FOR REVIEW PRIOR TO THE PLACEMENT OF CONCRETE.
6. FX.X INDICATES FOOTING TYPE. SEE FOOTING SCHEDULE FOR MORE INFORMATION.
7. SEE NOTES ON DRAWING S001 FOR ADDITIONAL INFORMATION.
8. SEE MECHANICAL, PLUMBING & ELECTRICAL DRAWINGS FOR HOUSEKEEPING PAD LOCATIONS.
9. PROVIDE CONTROL JOINTS AS SHOWN ON PLAN. JOINT SPACING NOT TO EXCEED 20'-0"O.C.
10. PROVIDE (2) #5 BARS IN SLAB ON GRADE AT ALL RE-ENTRANT CORNERS
11. SEE ARCHITECTURAL DRAWINGS FOR SLAB PITCH, FLOOR DRAINS, FOUNDATION DROPS, WATERPROOFING, VAPOR BARRIERS AND INSULATION.

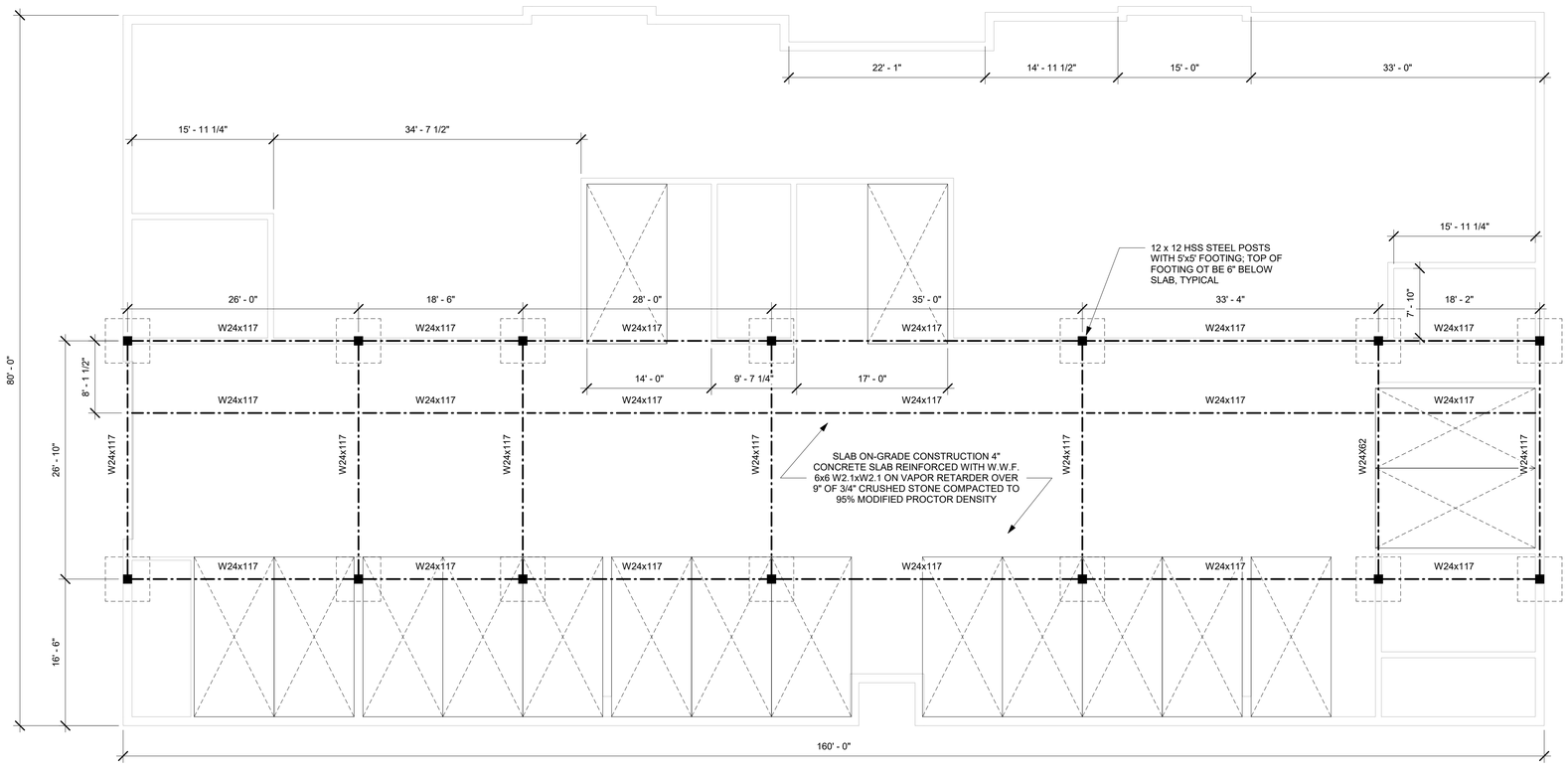

1 FIRST FLOOR STEEL FRAMING PLAN
1/8" = 1'-0"

General Notes

COMMONWEALTH OF MASSACHUSETTS
ROBERT RICHARD BUSSIERE
STRUCTURAL
NO. 30393
REGISTERED
PROFESSIONAL ENGINEER

No.	Revision/Issue	Date

Firm Name and Address
BUSSIERE STRUCTURAL ENGINEER
342 CANDIA ROAD
MANCHSETER, NH 03109
CONTACT:
ROBERT RICHARD BUSIERE, P.E.

Project Name and Address
MULTI-FAMILY APARTMENT
12 POND STREET
ASHLAND, MA

Project	Sheet
7814	S-100
Date: 02/25/2020	
Scale: As Noted	

These drawings and specifications are the property and copyright of JC Architect and shall not be used in whole or part, or shall be assigned to a third party without the express written permission of JC Architect.

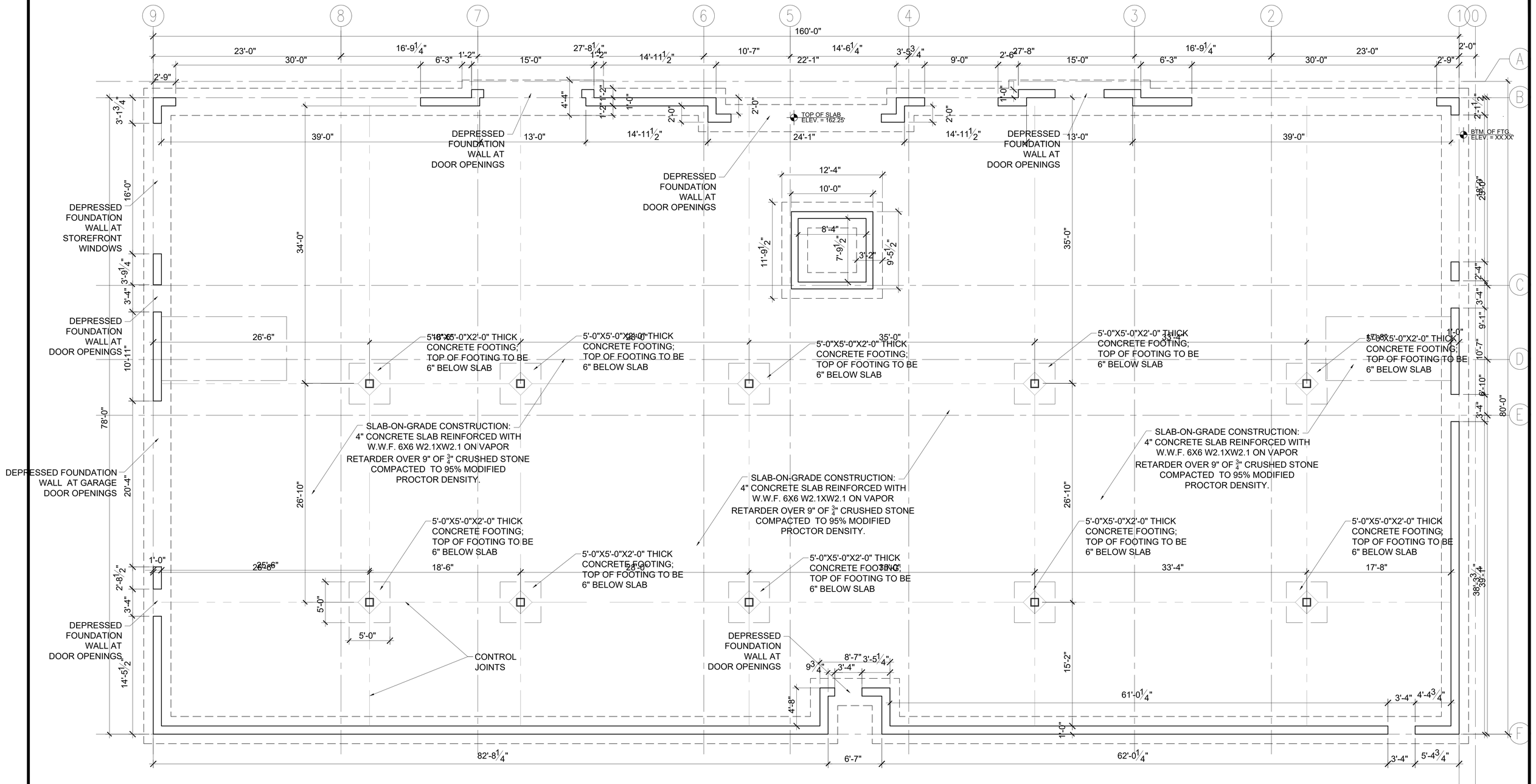

1 PROPOSED FOUNDATION PLAN

SCALE: 3/16" = 1'-0"

JCBT ARCHITECT

585 WASHINGTON STREET, QUINCY, MA 02169
ADMIN@JCBTARCHITECT.COM
TEL: (617) 404-8182

STRUCTURAL ENGINEER:

BUSSIERE STRUCTURAL ENGINEER
342 CANDIA ROAD
MANCHESTER, NH 03109
CONTACT:
ROBERT RICHARD BUSSIERE, P.E.

REGISTRATION

COMMONWEALTH OF MASSACHUSETTS
ROBERT RICHARD BUSSIERE
STRUCTURAL
NO. 30393
REGISTERED
PROFESSIONAL ENGINEER

REVISIONS

NO.	BY	DESCRIPTION	DATE

PROJECT

POND STREET RESIDENCES

12 POND STREET
ASHLAND, MA 01721
JCBT PROJECT # 20007

SHEET TITLE

FOUNDATION PLAN

DRAWN:	DRAWING NO:
SCALE: NOTED	S-100a
DATE:	
CHECKED:	
SHEET OF	

The following information is an approximate and NOT guaranteed	
Roof Area	0 ft²
Sheathing Count*	0 sheets
Overhang Lines	0 ft
Raked Lines	0 ft
Ridge Lines	0 ft
Hip Lines	0 ft
Valley Lines	0 ft

*Sheating count is an approximate and NOT guaranteed

Possible wall plate crushing issues.
See individual truss drawings for details.

Install skewed THDH hangers inverted to resist uplift @ beam.
Typical @ both corners of cantilever.

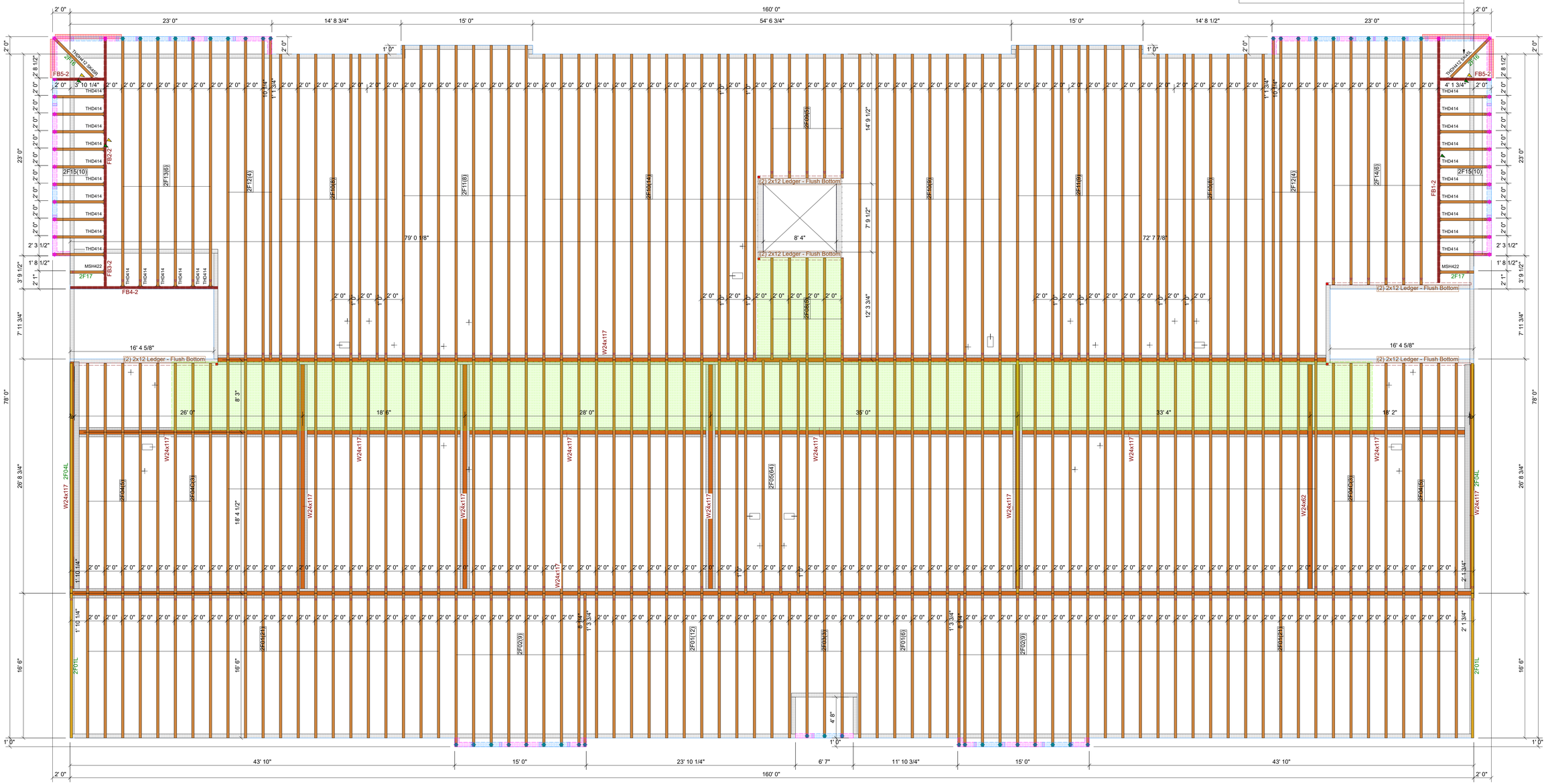

Products				
PlotID	Length	Product	Plies	Net Qty
FB1-2	30' 0"	1.75" x 18" 2.0E PWLVL	2	2
FB2-2	26' 0"	1.75" x 18" 2.0E PWLVL	2	2
FB3-2	6' 0"	1.75" x 18" 2.0E PWLVL	2	2
FB4-2	18' 0"	1.75" x 23.875" 2.0E PWLVL	2	2
FB5-2	6' 0"	1.75" x 23.875" 2.0E PWLVL	2	4

Truss Connector Total List		
Manuf	Product	Qty
USP	MSH422	2
USP	THD414	26
USP	THDH412 SK45L	1
USP	THDH412 SK45R	1

Connector Summary		
Qty	Manuf	Product
1		THD414
3	USP	THDH412

Design assumes elevator shaft & exterior wall location per the 2nd & 3rd floor plans. Garage floor plan shows elevator shaft & plan-north exterior walls in different locations that upper floor plans.

Design assumed double 2x12 ledgers @ elevators & stairwells, installed with the bottom flush to the bottom of the trusses.

Design assumes 2x12 top ribbon @ cantilevers to distrubute wall loads uniformly to the trusses below.

Design assumes sprinkler loading on top & bottom chord of trusses @ 2nd Floor level due to the garage below. Upper floors will have sprinkler loading applied only to the top chord assuming no exposed pipes in the units below.

Design assumes all steel beams are dropped.

Green hatching indicates 100 psf Live Load area.

Please verify all design assumptions.

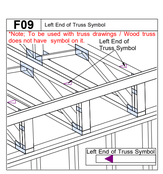

12 Pond St. Ashland,MA
2nd Floor Truss Placement Plan
By: BWT
03/04/2020
For Submittal
20013070BF2

THIS IS A TRUSS PLACEMENT DIAGRAM ONLY. These trusses are designed as individual building components to be incorporated into the building design at the specification of the building designer. See individual design sheets for each truss design identified on the placement drawing. The building designer is responsible for temporary and permanent bracing of the roof and floor system and for the overall structure. The design of the truss support structure including headers, beams, walls, and columns is the responsibility of the building designer. For general guidance regarding bracing, consult "Bracing of wood trusses" available from the Truss Plate Institute, 583 D'Onifrio Drive; Madison, WI 53179. It is the responsibility of the General Contractor/Superintendent to verify that the provided truss layout shall match the final intended construction plans, loading conditions, and use. If they do not, it is the responsibility of the General Contractor/Superintendent to provide prints/plans containing the latest specifications and designs. Universal Forest Products will not be responsible for print/plan changes by others after final approval ofshop drawings, nor will they be responsible for errors or modifications made on-site during construction. DO NOT CUT, NOTCH, DRILL, OR OTHERWISE "REPAIR" MANUFACTURED TRUSSES IN ANY WAY WITHOUT PRIOR WRITTEN AUTHORIZATION BY A LICENSED PROFESSIONAL DESIGNATED BY UFP. UFP WILL NOT BE HELD RESPONSIBLE FOR ANY MODIFICATIONS OR "CHARGE BACKS" DONE WITHOUT PRIOR WRITTEN AUTHORIZATION FROM UFP

UFP Belchertown, LLC
PO Box 945 / 155 Bay Road
Belchertown, MA 01007
PH: 413-323-7247
FX: 413-323-5780

The following information is an approximate and NOT guaranteed	
Roof Area	0 ft²
Sheathing Count*	0 sheets
Overhang Lines	0 ft
Raked Lines	0 ft
Ridge Lines	0 ft
Hip Lines	0 ft
Valley Lines	0 ft

*Sheating count is an approximate and NOT guaranteed

Possible wall plate crushing issues.
See individual truss drawings for details.

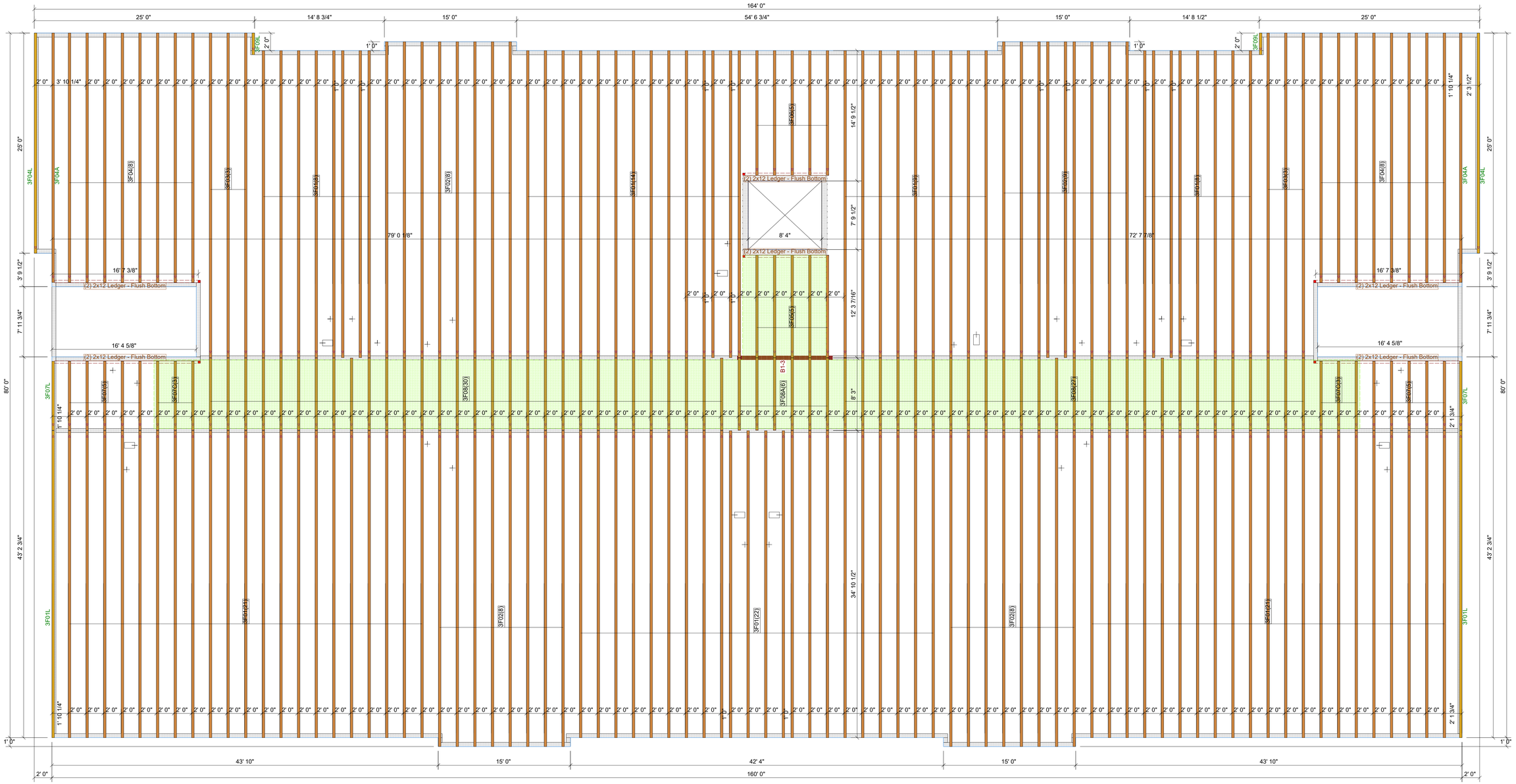

Products				
PlotID	Length	Product	Plies	Net Qty
B1-3	12' 0"	1.75" x 14" 2.0E PWLVL	3	3

Design assumes elevator shaft & exterior wall location per the 2nd & 3rd floor plans. Garage floor plan shows elevator shaft & plan-north exterior walls in different locations that upper floor plans.

Design assumed double 2x12 ledgers @ elevators & stairwells, installed with the bottom flush to the bottom of the trusses.

Design assumes sprinkler loading on top chord of trusses assuming no exposed pipes in the units below.

Green hatching indicates 100 psf Live Load area.

Please verify all design assumptions.

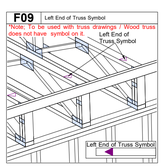

THIS IS A TRUSS PLACEMENT DIAGRAM ONLY. These trusses are designed as individual building components to be incorporated into the building design at the specification of the building designer. See individual design sheets for each truss design identified on the placement drawing. The building designer is responsible for temporary and permanent bracing of the roof and floor system and for the overall structure. The design of the truss support structure including headers, beams, walls, and columns is the responsibility of the building designer. For general guidance regarding bracing, consult "Bracing of wood trusses" available from the Truss Plate Institute, 583 D'Onifrio Drive; Madison, WI 53179. It is the responsibility of the General Contractor/Superintendent to verify that the provided truss layout shall match the final intended construction plans, loading conditions, and use. If they do not, it is the responsibility of the General Contractor/Superintendent to provide prints/plans containing the latest specifications and designs. Universal Forest Products will not be responsible for print/plan changes by others after final approval ofshop drawings, nor will they be responsible for errors or modifications made on-site during construction. DO NOT CUT, NOTCH, DRILL, OR OTHERWISE "REPAIR" MANUFACTURED TRUSSES IN ANY WAY WITHOUT PRIOR WRITTEN AUTHORIZATION BY A LICENSED PROFESSIONAL DESIGNATED BY UFP. UFP WILL NOT BE HELD RESPONSIBLE FOR ANY MODIFICATIONS OR "CHARGE BACKS" DONE WITHOUT PRIOR WRITTEN AUTHORIZATION FROM UFP

12 Pond St. Ashland,MA

3rd Floor Truss Placement Plan

03/04/2020 By: BWT

For Submittal

20013070BF3

UFP Belchertown, LLC
PO Box 945 / 155 Bay Road
Belchertown, MA 01007
PH: 413-323-7247
FX: 413-323-5780

The following information is an approximate and NOT guaranteed	
Roof Area	12435.06 ft²
Sheathing Count*	427 sheets
Overhang Lines	709.87 ft
Raked Lines	172.04 ft
Ridge Lines	0 ft
Hip Lines	0 ft
Valley Lines	0 ft

*Sheating count is an approximate and NOT guaranteed

Possible wall plate crushing issues.
See individual truss drawings for details.

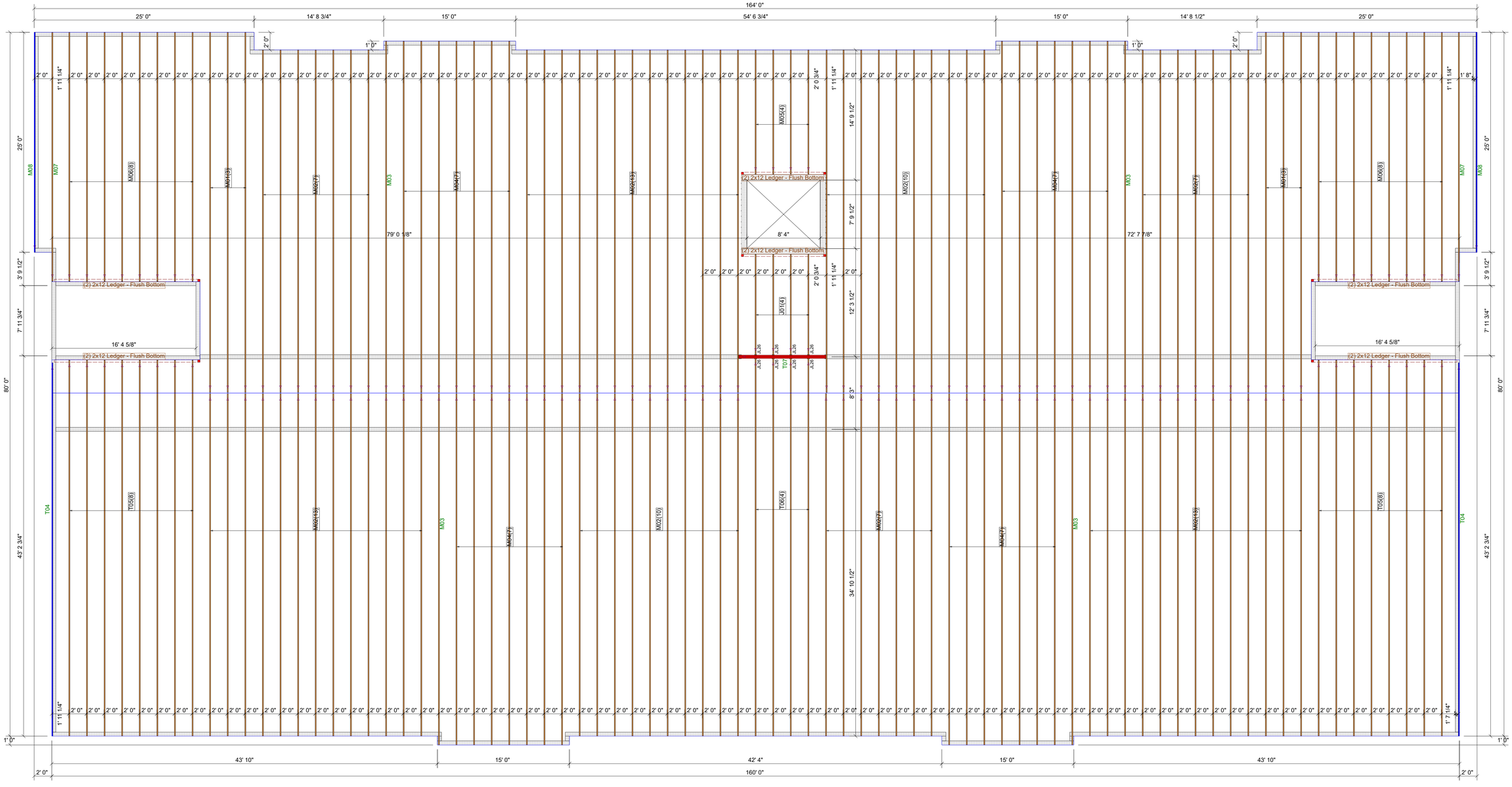

Truss Connector Total List		
Manuf	Product	Qty
USP	JL26	8

Design assumes elevator shaft & exterior wall location per the 2nd & 3rd floor plans. Garage floor plan shows elevator shaft & plan-north exterior walls in different locations that upper floor plans.

Design assumed double 2x12 ledgers @ elevators & stairwells, installed with the bottom flush to the bottom of the trusses.

Design assumes sprinkler loading on top chord of trusses assuming no exposed pipes in the units below.

Please verify all design assumptions.

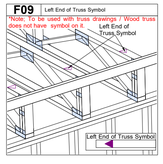

THIS IS A TRUSS PLACEMENT DIAGRAM ONLY. These trusses are designed as individual building components to be incorporated into the building design at the specification of the building designer. See individual design sheets for each truss design identified on the placement drawing. The building designer is responsible for temporary and permanent bracing of the roof and floor system and for the overall structure. The design of the truss support structure including headers, beams, walls, and columns is the responsibility of the building designer. For general guidance regarding bracing, consult "Bracing of wood trusses" available from the Truss Plate Institute, 583 D'Onifrio Drive; Madison, WI 53179. It is the responsibility of the General Contractor/Superintendent to verify that the provided truss layout shall match the final intended construction plans, loading conditions, and use. If they do not, it is the responsibility of the General Contractor/Superintendent to provide prints/plans containing the latest specifications and designs. Universal Forest Products will not be responsible for print/plan changes by others after final approval ofshop drawings, nor will they be responsible for errors or modifications made on-site during construction. DO NOT CUT, NOTCH, DRILL, OR OTHERWISE "REPAIR" MANUFACTURED TRUSSES IN ANY WAY WITHOUT PRIOR WRITTEN AUTHORIZATION BY A LICENSED PROFESSIONAL DESIGNATED BY UFP. UFP WILL NOT BE HELD RESPONSIBLE FOR ANY MODIFICATIONS OR "CHARGE BACKS" DONE WITHOUT PRIOR WRITTEN AUTHORIZATION FROM UFP

12 Pond St. Ashland,MA

Roof Truss Placement Plan

03/04/2020 By: BWT

For Submittal

20013070BR

UFP Belchertown, LLC
PO Box 945 / 155 Bay Road
Belchertown, MA 01007
PH: 413-323-7247
FX: 413-323-5780

WALL STUD SCHEDULE

FLOOR	EXTERIOR WALL STUD SIZE	INTERIOR WALL STUD SIZE
1ST	(2)–2X6 AT 16" O.C. NO.1/2 GRADE SPF	(2)–2X6 AT 16" O.C. NO.1/2 GRADE SPF
2ND	(2)–2X6 AT 16" O.C. NO.1/2 GRADE SPF	(2)–2X6 AT 16" O.C. NO.1/2 GRADE SPF
3RD	2X6 AT 16" O.C. NO.1/2 GRADE SPF	2X6 AT 16" O.C. NO.1/2 GRADE SPF
4TH	2X6 AT 16" O.C. STUD GRADE SPF	2X6 AT 16" O.C. STUD GRADE SPF

TYP. HEADER SCHEDULE

DESIGNATION	TYPE	JAMB\POST
H1	(3)–2x6	(1) JACK STUD (1) KING STUD
H2	(3)–2X8	(2) JACK STUD (1) KING STUD
H3	(3)–2x10	(2) JACK STUD (2) KING STUD
H4	(3)–2x12	(3) JACK STUD (2) KING STUD
H5	(3)–1¾"x9¼" LVL	(3) JACK STUD (2) KING STUD
H6	(3)–1¾"x11⅞" LVL	(3) JACK STUD (2) KING STUD
H7	(3)–1¾"x14" LVL	(3) JACK STUD (2) KING STUD

NOTE:
1. SHIM HEADERS FULL W/ ½" PLYWOOD SUCH THAT HEADER WIDTH IS FLUSH WITH STUDS AT INTERIOR AND EXTERIOR SURFACES.
2. JAMB POSTS TO BE CONTINUOUS TO FNDN BELOW, U.N.O.
3. WHERE POSTS ARE REQUIRED PROVIDE POSTS WHICH ARE THE SAME WIDTH AS THE BEAM AND DEPTH OF JACK STUDS SHOWN

SHEAR WALL SCHEDULE

TAG	WALL DESCRIPTION	FASTENER SCHEDULE		END POST EA. SIDE OF WALL	WALL PLATE ANCHOR BOLTS	HOLDDOWN
		EDGE	FIELD			
1	15/32" PLYWOOD APA RATED SHEATHING ON 2x6 STUDS BOTH SIDES, BLOCK ALL PANEL EDGES	10d @ 3"o.c.	10d @ 6"o.c.	(8) STUDS	⅝"ø BOLT AT 12"O.C. (9" EMBED.)	SIMPSON ATS TDS55
2	⅝" GYPSUM SHEATHING ON 2x6 STUDS (BOTH SIDES), BLOCK ALL PANEL EDGES	NO. 6 TYPE S OR W 1¼" DRYWALL SCREWS AT 8" O.C.	NO. 6 TYPE S OR W 1¼" DRYWALL SCREWS AT 12" O.C.	(2) STUDS	⅝"ø BOLT AT 36"O.C. (9" EMBED.)	N/A
3	23/32" APA RATED PLYWOOD SHEATHING ON 2x6 STUDS, BLOCK ALL PANEL EDGES	10d AT 3" O.C.	10d AT 6" O.C.	(3) STUDS	⅝"ø BOLT AT 24"O.C. (9" EMBED.)	SIMPSON HHDQ14–SDS2.5

NOTE:
1. AT SILL PLATE NAIL SHEATHING INTO BOTH SILL PLATES WITH 10d NAILS AT 6" O.C., STAGGER NAILING.
2. USE ⅝"ø WEDGE ANCHORS AT CONCRETE SLABS.

COLUMN SCHEDULE

2ND FLOOR EL.=34'–8"							
1ST FLOOR EL.=44'–6"							
GARAGE FINISHED EL.=33'–2"	HSS12x12x⅝	HSS12x12x⅝					
BOTT. OF BASE @ EL.=32'–3" (U.O.N.)							
COLUMN IDENTIFICATION(S)	B–5.4 B–4.9 B–4.2 B–3.2 B–2	E–5.1 E–4.7 E–4 E–3					
BASE PLATE	18"x1"x18"	18"x1"x18"					
BASE PLATE TYPE	A	A					
ANCHOR BOLTS	(4) 3/4"ø F1554 BOLTS	(4) 3/4"ø F1554 BOLTS					

FOOTING SCHEDULE
(3000 PSF ALLOWABLE BEARING PRESSURE)

MARK	SIZE	REINFORCING
F5	5'–0"x5'–0"x1'–6"	9–#6 EACH WAY (BOTT.)

1 STEEL SCHEDULES
SCALE: 1/8" = 1'-0"

General Notes

COMMONWEALTH OF MASSACHUSETTS
ROBERT RICHARD BUSSIERE
STRUCTURAL NO. 30393
REGISTERED PROFESSIONAL ENGINEER

No.	Revision/Issue	Date

Firm Name and Address
BUSSIERE STRUCTURAL ENGINEER
342 CANDIA ROAD
MANCHSETER, NH 03109
CONTACT:
ROBERT RICHARD BUSIERE, P.E.

Project Name and Address
MULTI-FAMILY APARTMENT
12 POND STREET
ASHLAND, MA

Project 7814
Date 02/25/2020
Scale As Noted
Sheet S-201

These drawings and specifications are the property and copyright of JC Architect and shall not be used in whole or part, or shall be assigned to a third party without the express written permission of JC Architect.

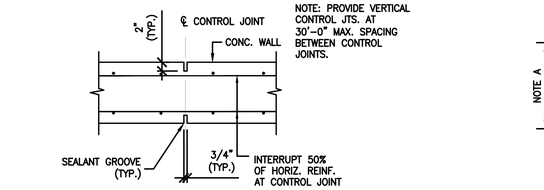

4 CONC. WALL VERT. CONTROL JOINT
SCALE: 3" = 1'-0"

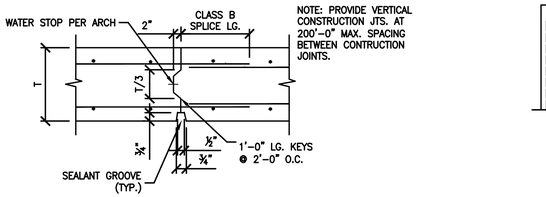

4A CONC. WALL CONSTRUCTION JOINT
SCALE: N.T.S.

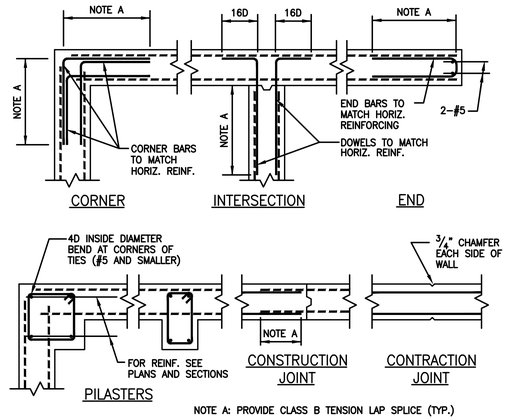

3 TYP. CONCRETE WALL DETAILS
SCALE: N.T.S.

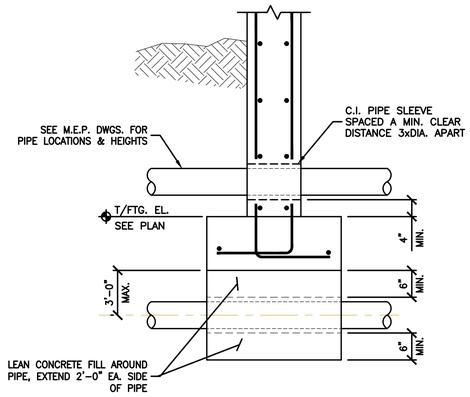

2 TYP. PIPE SLEEVE AT FOUNDATION WALL
SCALE: 3/4" = 1'-0"

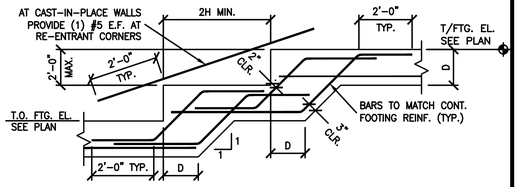

1 TYPICAL STEP IN WALL FOOTING
SCALE: N.T.S.

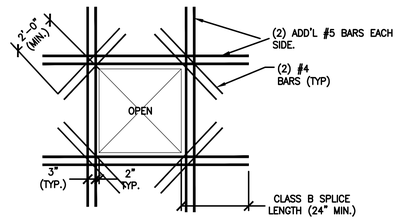

5 TYP. REINF. AT CONC. WALL OPENINGS
SCALE: N.T.S.

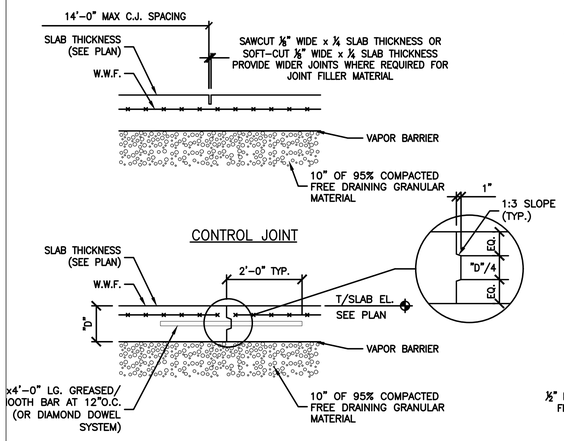

9 TYP. SLAB ON GRADE DETAILS
SCALE: N.T.S.

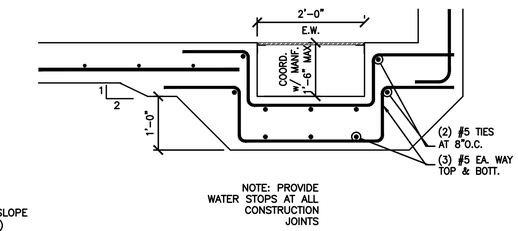

8 TYP. SUMP PIT DETAIL
SCALE: N.T.S.

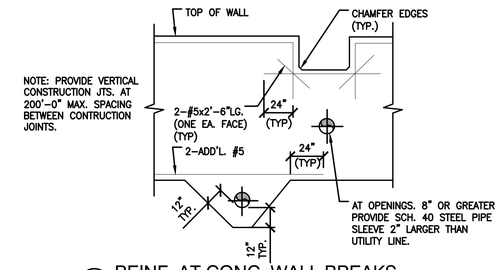

7 REINF. AT CONC. WALL BREAKS
SCALE: N.T.S.

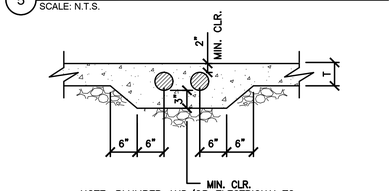

6 TYP. PIPE/CONDUIT IN SLAB DETAIL
SCALE: N.T.S.

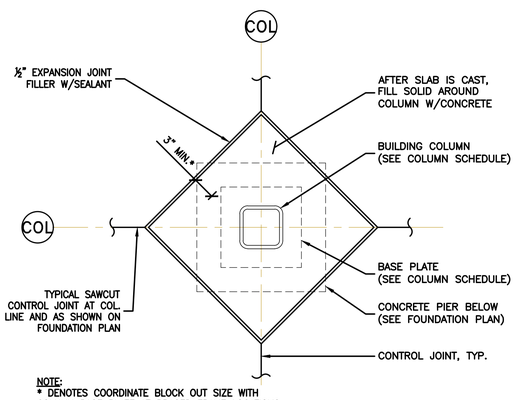

14 TYP. COLUMN ISOLATION DETAIL
SCALE: N.T.S.

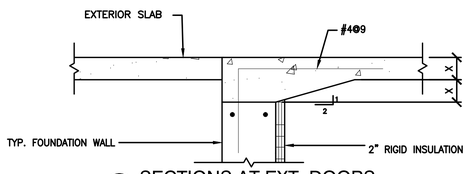

12 SECTIONS AT EXT. DOORS
SCALE: N.T.S.

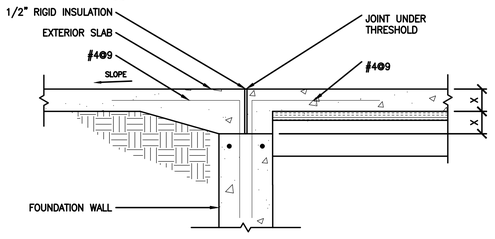

13 SECTIONS AT EXT. DOORS
SCALE: N.T.S.

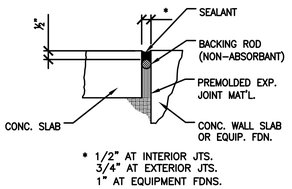

* 1/2" AT INTERIOR JTS.
3/4" AT EXTERIOR JTS.
1" AT EQUIPMENT FDNS.

10 TYP. SLAB ISOLATION JOINT
SCALE: N.T.S.

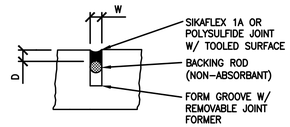

JOINT SEALER LOCATION	W	D
CONTROL JOINT	1/4"	1/4"
INTERIOR ISOLATION JOINT	1/2"	1/2"
EXTERIOR ISOLATION JOINT	3/4"	1/2"
EQUIP. FND. ISOLATION JOINT	1"	1/2

11 SEALANT GROOVE
SCALE: N.T.S.

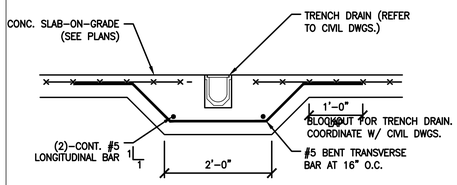

15 TRENCH DRAIN DETAIL
SCALE: 3/4" = 1'-0"

General Notes

No.	Revision/Issue	Date

Firm Name and Address
BUSSIERE STRUCTURAL ENGINEER
342 CANDIA ROAD
MANCHSETER, NH 03109
CONTACT:
ROBERT RICHARD BUSIERE, P.E.

Project Name and Address
MULTI-FAMILY APARTMENT
12 POND STREET
ASHLAND, MA

Project 7814
Date 02/25/2020
Scale As Noted
Sheet S-202

These drawings and specifications are the property and copyright of JC Architect and shall not be used in whole or part, or shall be assigned to a third party without the express written permission of JC Architect.

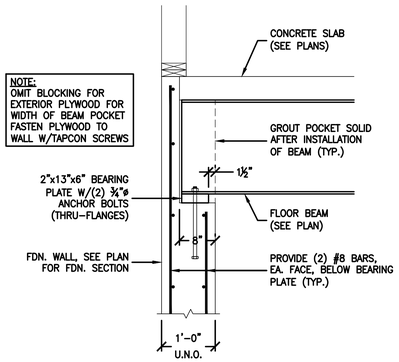

4 TYP. BEARING PLATE AT EXT. WALL
SCALE: 3/4" = 1'-0"

BEAM STUD SCHEDULE		
MAX. BEAM SIZE	STUD SIZE	# OF ROWS (# OF STUDS)
W10 AND W12	¾"ø x5"	3 (6 TOTAL)
W14	¾"ø x5"	4 (8 TOTAL)
W16 AND W18	¾"ø x5"	5 (10 TOTAL)
W21 AND W24	¾"ø x5"	7 (14 TOTAL)

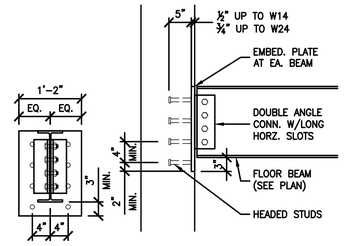

3 EMBEDDED PLATE DETAIL
SCALE: 3/4" = 1'-0"

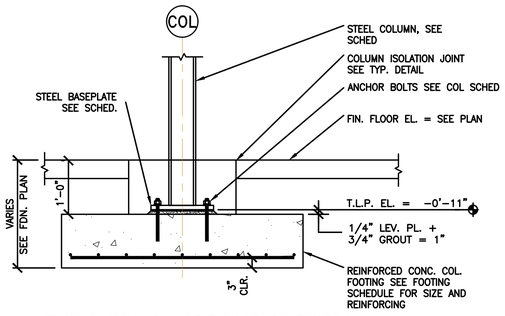

2 TYP. INTERIOR FOOTING SECTION
SCALE: 3/4" = 1'-0"

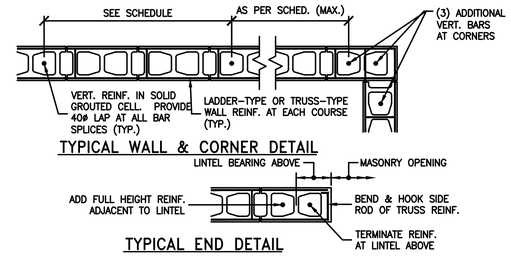

1 TYPICAL MASONRY DETAILS
SCALE: 3/4" = 1'-0"

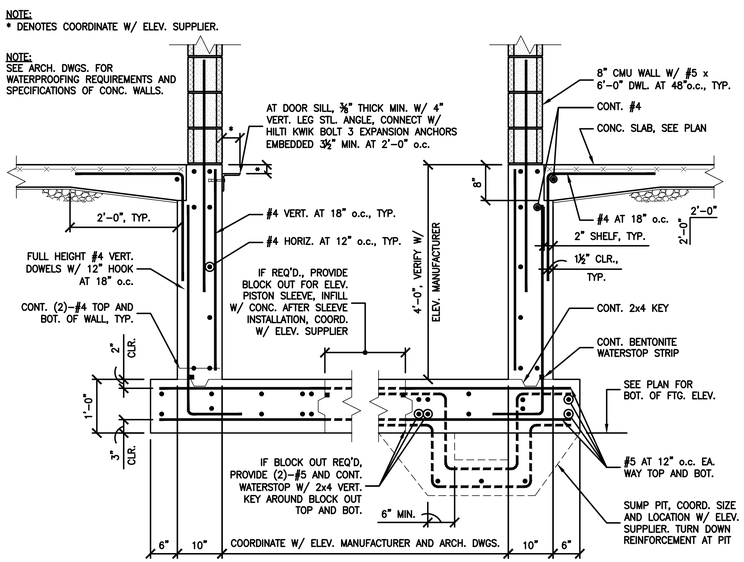

5 TYPICAL ELEVATOR PIT DETAIL
NO SCALE

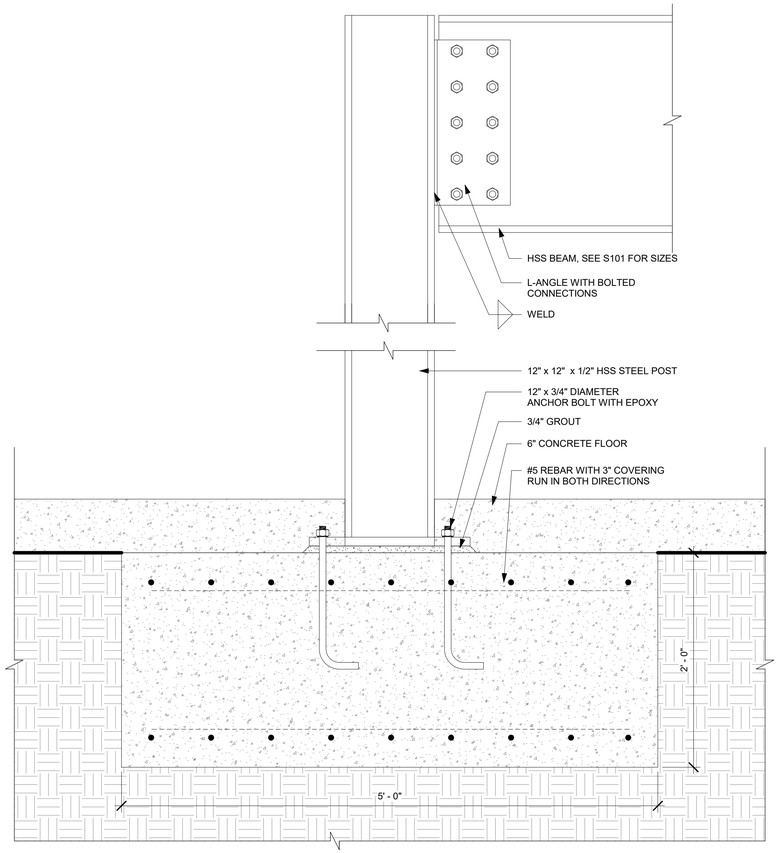

6 TYP. POST TO BEAM MOMENT CONNECTION
1 1/2" = 1'-0"

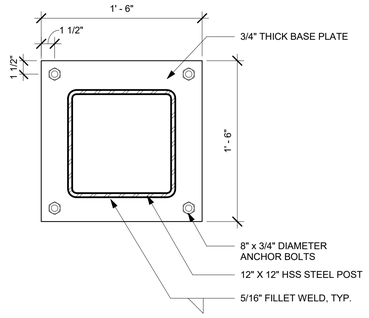

7 TYP. BASE PLATE PLAN
1 1/2" = 1'-0"

General Notes



No.	Revision/Issue	Date

Firm Name and Address
BUSSIERE STRUCTURAL ENGINEER
342 CANDIA ROAD
MANCHSETER, NH 03109
CONTACT:
ROBERT RICHARD BUSIERE, P.E.

Project Name and Address
MULTI-FAMILY APARTMENT
12 POND STREET
ASHLAND, MA

Project	7814	Sheet	S-203
Date	02/25/2020		
Scale	As Noted		

These drawings and specifications are the property and copyright of JC Architect and shall not be used in whole or part, or shall be assigned to a third party without the express written permission of JC Architect.

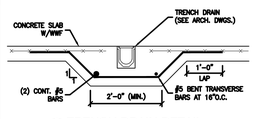

10 TRENCH DRAIN DETAIL
SCALE: 3/4" = 1'-0"

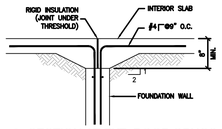

8 SECTION AT EXT. DOOR OPNGS.
SCALE: N.T.S.

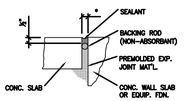

6 TYP. SLAB ISOLATION JOINT
SCALE: N.T.S.

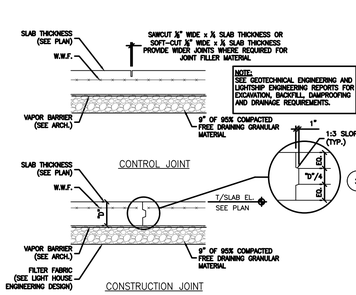

5 TYP. SLAB ON GRADE DETAILS
SCALE: N.T.S.

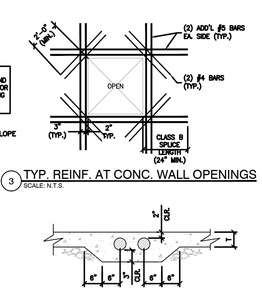

3 TYP. REINF. AT CONC. WALL OPENINGS
SCALE: N.T.S.

4 TYP. PIPE/CONDUIT IN SLAB DETAIL
SCALE: N.T.S.

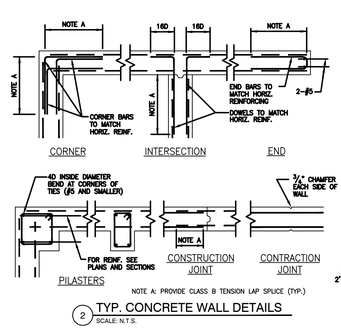

2 TYP. CONCRETE WALL DETAILS
SCALE: N.T.S.

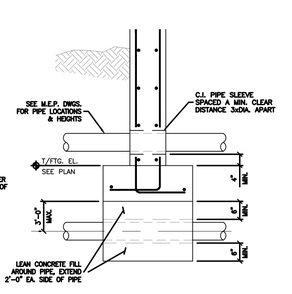

1 TYP. PIPE SLEEVE AT FOUNDATION WALL
SCALE: 3/4" = 1'-0"

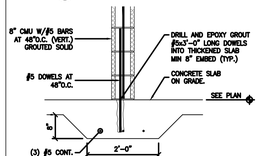

11 THICKENED SLAB AT CMU WALLS
SCALE: 3/4" = 1'-0"

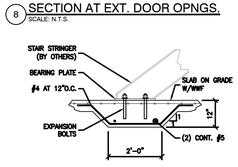

9 TYP. THICKENED SLAB AT STAIR STRINGER
SCALE: 3/4" = 1'-0"

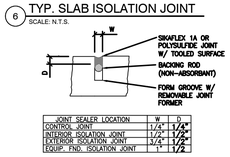

JOINT SEALER LOCATION	W	D
CONTROL JOINT	1/4"	1/4"
INTERIOR ISOLATION JOINT	1/2"	1/2"
EXTERIOR ISOLATION JOINT	1/4"	1/2"
EQUIP. FND. ISOLATION JOINT	1"	1/2"

7 SEALANT GROOVE
SCALE: N.T.S.

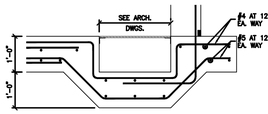

12 ELEVATOR SUMP PIT DETAIL
SCALE: N.T.S.

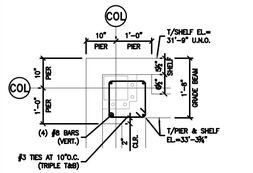

13 TYP. CORNER PIER AT GRADE BEAM
SCALE: 3/4"=1'-0"

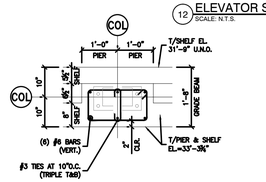

14 TYP. PIER AT PERIMETER GRADE BEAM
SCALE: 3/4"=1'-0"

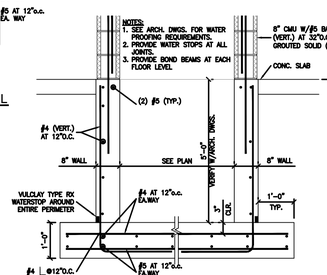

15 TYP. ELEVATOR PIT SECTION
SCALE: N.T.S.

BEAM STUD SCHEDULE		
MAX. BEAM SIZE	STUD SIZE	# OF ROWS (# OF STUDS)
W10 AND W12	⅜"ø x 5"	3 (6 TOTAL)
W14	⅜"ø x 5"	4 (8 TOTAL)
W16 AND W18	⅜"ø x 5"	5 (10 TOTAL)
W21 AND W24	⅜"ø x 5"	7 (14 TOTAL)

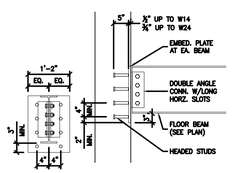

16 EMBEDDED PLATE DETAIL
SCALE: 3/4" = 1'-0"

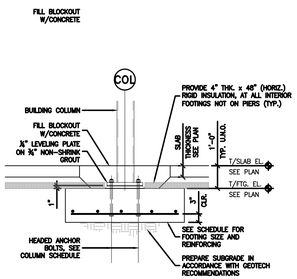

17 TYP. INTERIOR FOOTING (W/O PIER)
SCALE: N.T.S.

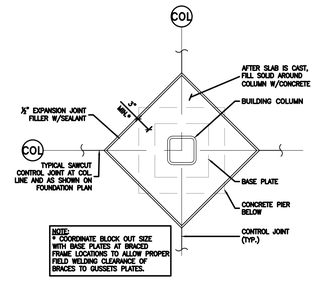

18 TYP. COLUMN ISOLATION DETAIL
SCALE: N.T.S.

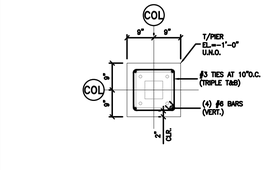

21 PIER DETAIL - P1
SCALE: 3/4" = 1'-0"

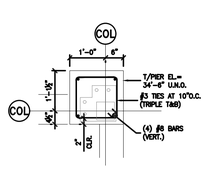

22 PIER DETAIL - P6
SCALE: 3/4" = 1'-0"

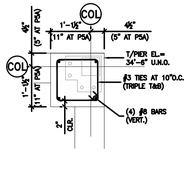

23 PIER DETAIL - P5 & P5A
SCALE: 3/4" = 1'-0"

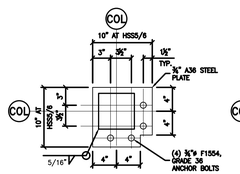

24 TYP. EXTEIOR WALL BASEPLATES (NON-LATERAL)
SCALE: N.T.S.

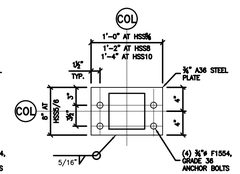

25 TYP. BASEPLATE (NON-LATERAL)
SCALE: N.T.S.

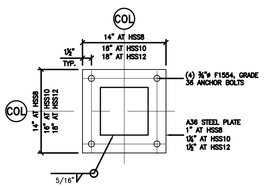

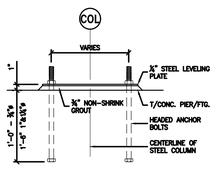

26 BASEPLATE SECTION
N.T.S.

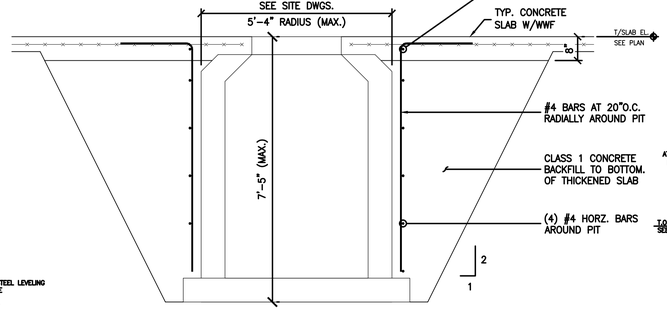

27 TYP. OIL SEPARATOR PIT DETAIL
SCALE: NTS

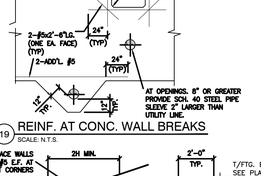

19 REINF. AT CONC. WALL BREAKS
SCALE: N.T.S.

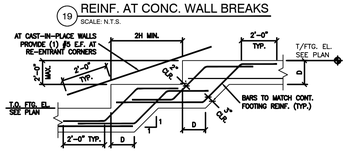

20 TYPICAL STEP IN WALL FOOTING
SCALE: N.T.S.

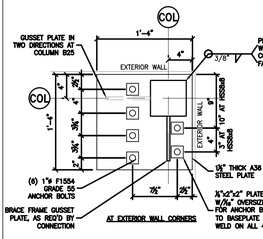

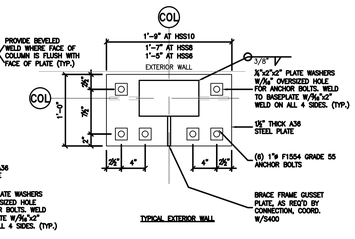

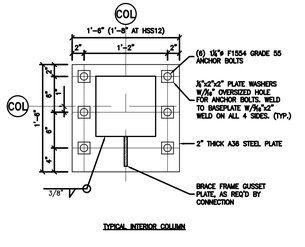

28 TYP. BASEPLATES (LATERAL)
SCALE: N.T.S.

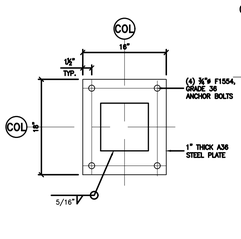

29 BASEPLATE AT G14
SCALE: N.T.S.

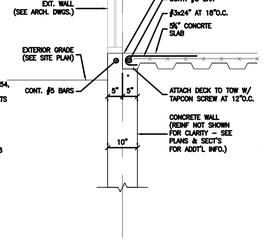

30 SECTION
SCALE: 3/4" = 1'-0"

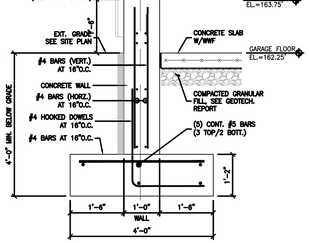

31 SECTION
SCALE: 3/4" = 1'-0"

STEEL ANGLE LINTEL SCHEDULE			
MASONRY OPENING WIDTH	LINTEL ELEVATION	4" MASONRY LINTEL SIZE	8" CMU LINTEL SIZE
UP TO 4'-8"	SEE ARCH. DWGS.	L3½x3½x5/16	(2) L3½x3½x5/16
4'-8" TO 5'-8"	SEE ARCH. DWGS.	L4x3½x5/16	(2) L4x3½x5/16
5'-8" TO 6'-8"	SEE ARCH. DWGS.	L5x3½x5/16	(2) L5x3½x5/16

NOTE:
1. PROVIDE AND INSTALL LINTEL ANGLES FOR MASONRY OPENINGS IN ACCORDANCE WITH THE SCHEDULE SHOWN ABOVE. INSTALL LONG LEG VERTICAL. SEE ARCH AND MECH. DRAWINGS FOR LOCATIONS.
2. PROVIDE A 8" MINIMUM BEARING LENGTH ON EACH SIDE OF LINTEL. FILL TWO COURSE OF MASONRY BELOW BEARING WITH GROUT.
3. WHERE MINIMUM BEARING CANNOT BE PROVIDED, ATTACH SECURELY TO ADJACENT STRUCTURAL MEMBERS OR PROVIDE SEPARATE SUPPORTS.
4. WHERE LINTELS OCCUR IN EXTERIOR WALLS MINIMUM THICKNESS SHALL BE ⅜". LINTELS AND STRUCTURAL STEEL EXPOSED TO WEATHER SHALL BE HOT-DIP-GALVANIZED ACCORDING TO ASTM A123.
5. SCHEDULE LINTEL ELEVATION SHOWN IS BOTTOM OF PLATE. GC/MASON TO COORDINATE W/ARCH DWGS.

33 LOOSE LINTEL SCHEDULE
SCALE: N.T.S.

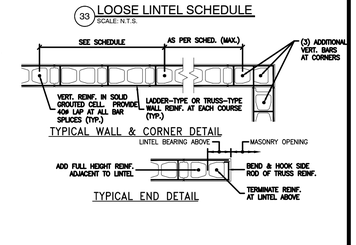

32 TYPICAL MASONRY DETAILS
SCALE: 3/4" = 1'-0"

General Notes

No.	Revision/Issue	Date

Firm Name and Address
BUSSIERE STRUCTURAL ENGINEER
342 CANDIA ROAD
MANCHSETER, NH 03109
CONTACT:
ROBERT RICHARD BUSIERE, P.E.

Project Name and Address
MULTI-FAMILY APARTMENT
12 POND STREET
ASHLAND, MA

Project	7814	Sheet	S-204
Date	02/25/2020		
Scale	As Noted		

These drawings and specifications are the property and copyright of JC Architect and shall not be used in whole or part, or shall be assigned to a third party without the express written permission of JC Architect.

GENERAL:
THE WORK COVERED BY THIS SECTION OF THE SPECIFICATIONS (THE "PROJECT") CONSISTS OF PROVIDING ALL LABOR, EQUIPMENT, APPLIANCES AND MATERIALS, AND IN PERFORMING ALL OPERATIONS IN CONNECTION WITH THE INSTALLATION OF THE NEW HEATING, AIR CONDITIONING AND VENTILATION SYSTEMS IN THE PROJECT.

INSTALLATION OF THE SYSTEMS SHALL CONFORM TO THE REQUIREMENTS OF THE MASSACHUSETTS STATE BUILDING CODE NINTH EDITION, NATIONAL ELECTRIC CODE, INTERNATIONAL ENERGY CONSERVATION CODE, NFPA, ALL APPLICABLE CODES AND LAWS AND OTHER AGENCIES HAVING JURISDICTION, SMACNA HVAC DUCT CONSTRUCTION STANDARDS, AMERICAN SOCIETY OF HEATING, REFRIGERATION AND AIR CONDITIONING ENGINEERS (ASHRAE), AND THE AMERICAN CONFERENCE OF GOVERNMENTAL INDUSTRIAL HYGIENISTS.

SCOPE OF WORK SHALL INCLUDE LABOR, PREMIUM TIME, MATERIALS, TOOLS, EQUIPMENT, TRANSPORTATION, SCAFFOLDING, HOISTING AND RIGGING, ETC. TO PERFORM THE WORK AS HEREIN SPECIFIED FOR A COMPLETE INSTALLATION.

INTENT: IT IS THE INTENTION OF THESE SPECIFICATIONS AND DRAWINGS TO REQUIRE THE EQUIPMENT TO BE FURNISHED COMPLETE IN EVERY RESPECT, AND THIS CONTRACTOR SHALL FURNISH ALL EQUIPMENT NEEDED AND USUALLY FURNISHED IN CONNECTIONS WITH SUCH SYSTEMS. EQUIPMENT, MATERIALS AND ARTICLES INCORPORATED IN THE WORK SHALL BE NEW AND IN THE BEST GRADE OF THEIR RESPECTIVE KINDS FOR THE TYPE OF WORK INVOLVED.

QUALITY ASSURANCE: COMPLY WITH ALL APPLICABLE FEDERAL AND STATE LAWS AND ALL LOCAL CODES, BY-LAWS AND ORDINANCES. WHERE PROVISIONS OF THE CONTRACT DOCUMENTS CONFLICT WITH ANY CODES, RULES AND REGULATIONS, THE LATTER SHALL GOVERN. WHERE THE CONTRACT REQUIREMENTS ARE IN EXCESS OF APPLICABLE CODES, RULES AND REGULATIONS, THE CONTRACT PROVISIONS SHALL GOVERN UNLESS THE ENGINEER RULES OTHERWISE. REQUEST INSPECTIONS FROM AUTHORITIES HAVING JURISDICTION, OBTAIN ALL PERMITS AND PAY FOR ALL FEES AND INSPECTION CERTIFICATES AS APPLICABLE AND/OR REQUIRED. ALL PERMITS AND CERTIFICATES SHALL BE TURNED OVER TO THE OWNERS AT THE COMPLETION OF THE WORK.

GUARANTEE/WARRANTY: THE HVAC CONTRACTOR SHALL SUBMIT MANUFACTURER'S WARRANTIES FOR NEW PRODUCTS AS SPECIFIED IN THIS SECTION. THE HVAC CONTRACTOR SHALL WARRANT ENTIRE SYSTEM FOR ONE YEAR FROM OWNER'S ACCEPTANCE. ALL WARRANTIES SHALL BE SUBMITTED TO THE OWNER PRIOR TO FINAL PAYMENT.

RECORD DRAWINGS: FURNISH ONE SET OF MARKED UP REDLINE DRAWINGS THAT NEATLY AND ACCURATELY DOCUMENT THE INSTALLATION.

EQUIPMENT SUBMITTALS: SUBMIT FOR APPROVAL, COPIES OF DESCRIPTIVE LITERATURE GIVING PERFORMANCE DATA, PHYSICAL SIZE, WIRING DIAGRAMS, CAPACITY, MATERIALS, ETC. FOR ALL MATERIALS AND EQUIPMENT SPECIFIED HEREIN AND ON THE DRAWINGS.

SUBSTITUTIONS: SUBSTITUTIONS OF EQUIPMENT AND MATERIALS OTHER THAN THOSE SHOWN ON THE DRAWINGS OR NAMED IN THE SPECIFICATIONS MAY BE MADE ONLY WITH THE WRITTEN APPROVAL OF THE ENGINEER WHOM RESERVES THE RIGHT TO REQUIRE ADEQUATE PROOF OF THE QUALITY OF THE SUBSTITUTE BEFORE PERMITTING ITS USE.

WHERE A CONTRACTOR PROPOSES TO USE AN ITEM OF EQUIPMENT OTHER THAN THAT SPECIFIED OR DETAILED ON THE DRAWINGS, WHICH REQUIRES ANY REDESIGN OF THE STRUCTURE, PARTITIONS, FOUNDATIONS, WIRING, PIPING, OR ANY OTHER PART OF THE MECHANICAL, ELECTRICAL, OR ARCHITECTURAL LAYOUT, ALL SUCH REDESIGN AND ALL NEW DRAWINGS AND DETAILING REQUIRED THEREFORE SHALL, WITH THE APPROVAL OF THE ENGINEER AND ARCHITECT, BE PREPARED BY THIS CONTRACTOR AT HIS OWN EXPENSE.

WHERE SUCH APPROVED DEVIATION REQUIRES A DIFFERENT QUANTITY AND ARRANGEMENT OF PIPING, WIRING, CONDUIT AND EQUIPMENT FROM THAT SPECIFIED OR INDICATED ON THE DRAWINGS, WITH THE APPROVAL OF THE ENGINEER AND ARCHITECT, CONTRACTOR SHALL FURNISH AND INSTALL ANY SUCH PIPING, STRUCTURAL SUPPORTS, INSULATION, CONTROLLERS, MOTORS, STARTERS, ELECTRICAL WIRING AND CONDUIT, AND ANY OTHER ADDITIONAL EQUIPMENT REQUIRED BY THE SYSTEM, AT NO ADDITIONAL COST TO THE OWNER.

CONNECTIONS TO EQUIPMENT SHALL BE VERIFIED WITH MANUFACTURE'S CERTIFIED DRAWINGS. TRANSITIONS TO ALL EQUIPMENT SHALL BE VERIFIED AND PROVIDED FOR EQUIPMENT FURNISHED.

ALL DIMENSIONS SHALL BE FIELD VERIFIED AND COORDINATED PRIOR TO PROCUREMENT OR FABRICATION. FIELD MODIFICATIONS SUCH AS OFFSETS IN PIPING OR DUCTWORK DUE TO OBSTRUCTIONS OR INTERFERENCES ARE PERMITTED.

ALL DUCTWORK CONTRACTIONS SHALL BE IN ACCORDANCE WITH THE LATEST INTERNATIONAL MECHANICAL CODE AND LOCAL CODES.

PROVIDE AIR TURNING VANES FOR ALL 90 DEGREE RECTANGULAR DUCT ELBOWS.

COORDINATED DIFFUSER. GRILLE AND REGISTER LOCATIONS WITH ARCHITECTURAL CEILING PLANS AND EQUIPMENT OF ALL TRADES.

ALL EQUIPMENT, DUCTWORK ETC. SHALL BE SUPPORTED AS DETAILED AND/OR SPECIFIED. PROVIDE ADDITIONAL SUPPORTS AS REQUIRED TO PROVIDE A VIBRATION-FREE INSTALLATION.

ALL DUCT SIZES ARE SHOWN IN INCHES.

TRAPPED CONDENSATE DRAINS FROM AL MECHANICAL EQUIPMENT SHALL BE PROVIDED FOR PROPER DRAINAGE TO SUIT EQUIPMENT FURNISHED.

ACCESS PANELS IN DUCTWORK AND CEILING SHALL BE PROVIDED WHERE REQUIRED FOR OPERATIONS, BALANCING OR MAINTENANCE OF ALL MECHANICAL EQUIPMENT.

ALL DUCTWORK IS SHOWN SCHEMATICALLY PROVIDED ALL TRANSITIONS, TURNING VANES, ELBOWS, FITTINGS ETC. ALLOW FOR SMOOTH AIR FLOW.

FLEXIBLE DUCT CONNECTIONS SHALL BE KEPT TO A MINIMUM.

PROVIDE TRANSITIONS AT DIFFUSER NECKS AS REQUIRED TO MATCH SIZES OF FLEX DUCTS TO BE CONNECTIONS.

DIFFUSER NECKS SHALL MATCH DIAMETERS WITH THE ASSOCIATED FLEXIBLE DUCT.

ALL FLEXIBLE DUCT SHALL BE METAL ALUMINUM, UL LISTED 181 CLASS 1 INSULATED, SUITABLE FOR 12-IN W.G. NEGATIVE INSTALL WORKING PRESSURE.

SUPPLY AIR QUANTITY FOR EACH HVAC UNIT TON SHALL BE 400 CFM.

OUTDOOR SHALL BE PROVIDED TO ALL UNITS, PER 2015 IMC 404.3

MECHANICAL ENCLOSED GARAGE VENTILATION SHALL RUN CONTINUOUSLY.

DUCTWORK:

DUCT SYSTEM	TYPE & MATERIAL	DESIGN PRESS. (IN wc)	INSULATION
MAIN SUPPLY DUCTWORK	GALV. STEEL	1.5"	R6 WRAP
RETURN DUCTWORK	GALV. STEEL	1.5"	R6 WRAP

1.) WORK UNDER THIS SECTION INCLUDES BUT IS NOT LIMITED TO PROVIDING DUCTS, VOLUME AND FIRE DAMPERS, ACCESS DOORS, DIFFUSERS, REGISTERS, GRILLES AND ALL AUXILIARY WORK OF ANY KIND NECESSARY TO MAKE THE AIR DISTRIBUTION SYSTEMS THROUGHOUT THE BUILDING COMPLETE AND READY FOR SATISFACTORY OPERATION.

2.) ALL DUCTWORK SHALL BE CONSTRUCTED IN CONFORMANCE WITH SMACNA DUCT CONSTRUCTION STANDARDS FOR THE PRESSURES INDICATED IN THE SCHEDULE.

3.) NFPA COMPLIANCE: COMPLY WITH ANSI/NFPA 90A "STANDARD FOR THE INSTALLATION OF AIR- CONDITIONING AND VENTILATING SYSTEMS" AND ANSI/NFPA 90B "STANDARD FOR THE INSTALLATION OF WARM AIR HEATING AND AIR-CONDITIONING SYSTEMS".

4.) LONGITUDINAL JOINTS AND FITTINGS SHALL BE MADE OF PITTSBURGH LOCK JOINTS, UNLESS SPECIFIED OTHERWISE. INCREASE IN DUCT DIMENSIONS IN THE DIRECTION OF AIR FLOW SHALL BE MADE WITH TRANSITIONS NOT EXCEEDING 1 IN 7"; DECREASES NOT EXCEEDING 1 IN 4"; SUPPLY DUCT PANELS OVER 12" WIDE ARE TO BE CROSS BROKEN FOR STIFFNESS. CROSS BREAKING OF NEGATIVE PRESSURE EXHAUST AND RETURN AIR DUCTS IS NOT PERMITTED.

5.) DUCT SEALANT: DUCT SEALANT SHALL BE OF A NON-HARDENING, NONFLAMMABLE VINYL ACRYLIC MATERIAL. SEALANT MUST BE UL APPROVED FOR USE IN LOW PRESSURE DUCTWORK. ALL DUCTWORK SHALL BE SEALED COMPLETELY; ACCORDING TO SMACNA STANDARDS, AT ALL TRANSVERSE JOINTS AND LONGITUDINAL SEAMS.

6.) DUCT CEMENT: NON-HARDENING MIGRATING MASTIC OR LIQUID NEOPRENE BASED CEMENT (TYPE APPLICABLE FOR FABRICATION/INSTALLATION DETAIL) AS COMPOUNDED AND RECOMMENDED BY MANUFACTURER SPECIFICALLY FOR CEMENTING FITTING COMPONENTS OR LONGITUDINAL SEAMS IN DUCTWORK.

7.) FLEXIBLE DUCTWORK SHALL BE LIMITED TO 5'-0" IN LENGTH FOR FINAL CONNECTIONS TO REGISTERS, GRILLES AND DIFFUSERS.

SYSTEM START UP & FINAL INSPECTION:
THIS CONTRACTOR SHALL START UP AND PLACE ALL EQUIPMENT INTO SERVICE. EQUIPMENT MANUFACTURERS STANDARD STARTUP PROCEDURES SHALL BE FOLLOWED.

WHEN ALL WORK UNDER THIS CONTRACT HAS BEEN COMPLETED AS INDICATED ON THE DRAWINGS AND SPECIFIED HEREIN, AN INSPECTION SHALL BE MADE BY THE ENGINEER. AT THIS TIME THE HVAC SUBCONTRACTOR SHALL DEMONSTRATE THAT THE REQUIREMENTS OF THESE SPECIFICATIONS HAVE BEEN MET.

INSTRUCTIONS AND MANUALS:
THIS CONTRACTOR SHALL PROVIDE PRINTED INSTRUCTIONS COVERING OPERATIONS AND MAINTENANCE OF EACH MAJOR ITEM OF EQUIPMENT TO THE OWNER. UPON COMPLETION OF THE WORK AND AFTER ALL TESTS ARE COMPLETED, A TIME DESIGNATED BY THE OWNER AND IT'S ENGINEER SHALL BE SET IN WHICH THE CONTRACTOR SHALL INSTRUCT A REPRESENTATIVE OF THE OWNER IN PROPER OPERATION AND MAINTENANCE OF THE NEW AIR CONDITIONING SYSTEM. BOTH VERBAL AND WRITTEN INSTRUCTIONS SHALL BE FURNISHED IN DETAIL. WRITTEN SETS SHALL MAKE REFERENCE TO EACH ITEM AND DESCRIBE IT'S PROPER FUNCTIONING, ADJUSTMENT, AND MAINTENANCE. PROVIDE FIVE SETS OF BOUND AND INDEXED MANUALS WITH INSTRUCTIONS AND INCLUDE ALL SHOP DRAWING EQUIPMENT AND MANUFACTURER'S MAINTENANCE AND OPERATING INSTRUCTIONS FOR EACH PIECE OF EQUIPMENT. ALSO INCLUDE MANUFACTURERS PARTS LIST FOR EACH PIECE OF EQUIPMENT'S OPERATING CHARACTERISTICS, FAN CURVES, ETC.

SEQUENCE OF OPERATION:
GAS/ELEC ROOF TOP UNITS: (RTU-#)
GENERAL: RTU SHALL BE CONTROLLED VIA UNIT MOUNTED DIGITAL CONTROLLERS WITH A SPACE THERMOSTAT. RTUS SHALL BE INTERLOCKED WITH EXISTING JOHNSON CONTROLS METASYS BMS.

THE RTU SUPPLY FAN SHALL RUN CONTINUOUSLY DURING OCCUPIED MODE. WHEN THE UNIT IS COMMANDED ON, FIRST THE OUTSIDE AIR DAMPER SHALL OPEN TO ITS MINIMUM POSITION THEN THE SUPPLY FAN SHALL START. WHEN THE UNIT IS COMMANDED OFF, THE FAN SHALL STOP AND THE OUTSIDE AIR DAMPER SHALL CLOSE.

THE RTU SUPPLY FAN SHALL CYCLE DURING UNOCCUPIED MODE. WHEN THE UNIT IS COMMANDED ON, FIRST THE OUTSIDE AIR DAMPER SHALL BE CLOSED THEN THE SUPPLY FAN SHALL START. WHEN THE UNIT IS COMMANDED OFF, THE FAN SHALL STOP.

WHENEVER THE RTU IS IN OCCUPIED COOLING/HEATING MODE, THE OUTSIDE AIR DAMPER SHALL BE OPEN TO IT'S MINIMUM POSITION. WHENEVER THE RTU IS IN UNOCCUPIED COOLING/HEATING MODE, THE OUTSIDE AIR DAMPER SHALL BE CLOSED.

ECONOMIZER MODE:
DURING OCCUPIED COOLING MODE OF OPERATION, THE ECONOMIZER MODULE SHALL CHECK IF THE OUTSIDE AIR IS SUITABLE FOR FREE COOLING VIA THE OUTSIDE AIR ENTHALPY SENSOR. WHENEVER THE OUTSIDE AIR ENTHALPY IS APPROPRIATE FOR FREE COOLING, THE THE ECONOMIZER SHALL BE USED FIRST TO ATTEMPT TO SATISFY COOLING. WHEN THE OUTSIDE AIR IS PROVED TO BE UNSUITABLE FOR FREE COOLING, THE MECHANICAL COOLING SHALL OPERATE.

ON A CALL FOR OCCUPIED COOLING VIA WALL-MOUNTED THERMOSTAT, THE OUTSIDE AIR DAMPER SHALL CLOSE TO ITS MINIMUM DESIGN POSITION AND THE COOLING SECTION SHALL ENERGIZE TO MAINTAIN ROOM AIR TEMPERATURE SETPOINT OF 72°F (ADJ.)

ON A CALL FOR OCCUPIED HEATING VIA WALL-MOUNTED THERMOSTAT, THE OUTSIDE AIR DAMPER SHALL CLOSE TO ITS MINIMUM DESIGN POSITION AND THE HEATING SECTION SHALL MODULATE TO MAINTAIN ROOM AIR TEMPERATURE SETPOINT OF 72°F (ADJ.)

ON A CALL FOR MORNING WARM-UP VIA PRESET TIME SCHEDULE(ADJ.), THE FAN SHALL CYCLE ON, OUTSIDE AIR DAMPER SHALL CLOSE, AND THE GAS FIRED HEATING SECTION SHALL STAGE ON TO PROVIDE WARM AIR TO THE SPACE TO MAINTAIN ROOM AIR TEMPERATURE SETPOINT OF 72°F (ADJ.). ONCE SETPOINT IS ACHIEVED, THE SYSTEM SHALL SWITCH TO NORMAL OPERATION.

ON A CALL FOR UNOCCUPIED COOLING VIA WALL-MOUNTED THERMOSTAT, THE OUTSIDE AIR DAMPER SHALL CLOSE TO ITS MINIMUM DESIGN POSITION AND THE COOLING SECTION SHALL ENERGIZE TO MAINTAIN ROOM AIR TEMPERATURE SETPOINT OF 77°F (ADJ.)

ON A CALL FOR UNOCCUPIED HEATING VIA WALL-MOUNTED THERMOSTAT, THE OUTSIDE AIR DAMPER SHALL CLOSE TO ITS MINIMUM DESIGN POSITION AND THE HEATING SECTION SHALL MODULATE TO MAINTAIN ROOM AIR TEMPERATURE SETPOINT OF 65°F (ADJ.)

ROOM PRESSURE CONTROL:
A PRESSURE TRANSDUCER SHALL BE USED TO MEASURE AND REPORT DIRECT SPACE STATIC PRESSURE. AS THE ECONOMIZER OPENS AND THE SPACE PRESSURE RISES, THE UNIT POWER EXHAUST SHALL ENERGIZE.

UPON DETECTION OF SMOKE, VIA DUCT MOUNTED SMOKE DETECTOR, DAMPERS SHALL CLOSE, UNIT SHALL SHUT DOWN AND AN ALARM SHALL BE SENT TO THE FIRE ALARM CONTROL PANEL.

TESTING, ADJUSTING & BALANCING:
THE GENERAL CONTRACTOR SHALL OBTAIN THE SERVICES OF AN INDEPENDENT NEBB OR AABC CERTIFIED BALANCING AND TESTING SUBCONTRACTOR ENGINEER TO BALANCE ALL NEW AND/OR EXISTING EQUIPMENT AND AIR DISTRIBUTION SYSTEMS AS HEREIN SPECIFIED.

THE BALANCING SHALL BE CONDUCTED IN ACCORDANCE WITH NEBB TAB PROCEDURAL STANDARDS. UNIT DESIGNATION, MANUFACTURE, MODEL NUMBER, AND SERIAL NUMBER SHALL BE RECORDED FOR EACH PIECE OF EQUIPMENT.

TEST AND BALANCE FOR MECHANICAL EQUIPMENT:
BALANCER SHALL RECORD DESIGN VS ACTUAL FOR THE FOLLOWING:
FAN MOTORS: FAN MOTOR HP, FAN MOTOR RPM, FAN MOTOR AMPERAGE (RATED & OPERATING), FAN MOTOR VOLTAGE/PHASE/HZ
AIRSIDE: AIRFLOW (EXHAUST, OUTSIDE AIR, SUPPLY), STATIC PRESSURE (EXTERNAL, DISCHARGE & SUCTION), AIR TEMPERATURE (ENTERING & LEAVING), FAN RPM, FAN AMPERAGE.

TEST AND BALANCE FOR REGISTERS, GRILLES AND DIFFUSERS::
BALANCER SHALL RECORD DESIGN VS ACTUAL AIRFLOW AND PERCENT OFF FROM DESIGN. RECORD RGD DESIGNATION, NECK SIZE AND VOLUME DAMPER TYPE (IN DUCT DAMPER OR OPPOSED BLADE DAMPER AT REGISTER).

FIRE DAMPERS:
FIRE DAMPERS SHALL MEET LOCAL CODES AND THE REQUIREMENTS OF THE NATIONAL FIRE PROTECTION STANDARDS CONTAINED IN PAMPHLET 90A.

LOCATIONS OF THE FIRE DAMPERS SHALL BE AS SHOWN ON THE DRAWINGS OR AS REQUIRED BY CODE. DAMPERS SHALL BE APPROVED FOR USE IN PARTITIONS WITH FIRE RESISTANCE RATINGS OF TWO HOURS IN ACCORDANCE WITH NFPA PAMPHLET NO. 252-1979 AND UL-555, JULY 31, 1973.

DAMPERS SHALL BE ARRANGED TO CLOSE AUTOMATICALLY AND REMAIN TIGHTLY CLOSED UPON THE OPERATION OF A UL APPROVED FUSIBLE LINK OR OTHER APPROVED HEAT ACTUATED DEVICE, LOCATED WHERE READILY AFFECTED BY THE ABNORMAL RISE OF TEMPERATURE IN THE DUCT. FUSIBLE LINKS SHALL HAVE A TEMPERATURE RETAIN OF 50 DEGREES F ABOVE THE MAXIMUM NORMAL DUCT OPERATING TEMPERATURE, BUT NOT LESS THAN 165 DEGREES F.

FIRE DAMPERS SHALL BE INSTALLED SO AS TO PROVIDE BARRIER TO PASSAGE OF AIR WHEN IN A CLOSED POSITION. DAMPERS SHALL BE INSTALLED SO THEY WILL BE SELF SUPPORTING IN CASE OF DUCT DESTRUCTION DUE TO HEAT. CARE MUST BE EXERCISED THAT THE FRAME BE SET SO THAT THE CLOSING DEVICE WILL BET BIND. THESE FIRE DAMPERS SHALL BE INSTALLED IN ACCORDANCE WITH MANUFACTURER'S INSTRUCTION AND UL-555, PARAGRAPH 13.

TIGHT FITTING ACCESS DOORS SHALL BE PROVIDED FOR ACCESSIBILITY TO EACH DAMPER AND FUSIBLE LINK FOR INSPECTION AND MAINTENANCE.

ALL FIRE DAMPERS SHALL HAVE WRITTEN APPROVAL FROM LOCAL AUTHORITIES.

THE CONTRACTOR MUST TEST ALL FIRE DAMPERS WITH THE PRESENCE OF THE ARCHITECT BEFORE FINAL APPROVAL OF THE DUCTWORK CAN BE GIVEN.

ALL FIRE DAMPERS NOT ATTACHED TO SHAFT WALL REGISTERS SHALL HAVE BLADES OUT OF THE AIR STREAM AND SHALL BE MANUFACTURED BY RUSKIN, MODEL IBD2, OR APPROVED EQUAL.

ALL FIRE DAMPERS ATTACHED TO SHAFT WALL REGISTERS SHALL HAVE BLADES IN THE AIR STREAM AND SHALL BE MANUFACTURED BY RUSKIN, MODEL IBDT "THINLINE" OR APPROVED EQUAL.

EQUIPMENT IDENTIFICATION:
IDENTIFICATION SHALL BE APPLIED TO ALL EQUIPMENT SERVING THE SYSTEMS WITHIN THE SCOPE OF WORK FOR THIS PROJECT.

FURNISH AND ATTACH PLASTIC EQUIPMENT TAGS ONTO EVERY MAJOR PIECE OF EQUIPMENT. TAGS ARE TO BE PLACED ON EQUIPMENT OPEN TO SIGHT BELOW CEILINGS. TAGS SHALL BE 1½" HIGH X A MINIMUM OF 5" LONG PLASTIC LAMINATE WITH ¾" HIGH LETTERING. CHARACTERS SHALL BE BLACK EMBOSSED ON A WHITE BACKGROUND. EACH TAG SHALL BE SECURED TO THE EQUIPMENT WITH A MINIMUM OF TWO STAINLESS STEEL SCREWS.

FURNISH AND ATTACH PLASTIC EQUIPMENT TAGS ON ALL ROOF MOUNTED EQUIPMENT. TAGS SHALL BE 6" HIGH X A MINIMUM OF 8" LONG PLASTIC LAMINATE WITH 4" HIGH LETTERING. CHARACTERS SHALL BE BLACK EMBOSSED ON A WHITE BACKGROUND. EACH TAG SHALL BE SECURED TO THE EQUIPMENT WITH A MINIMUM OF TWO STAINLESS STEEL SCREWS.

MARKERS SHALL BE MANUFACTURED BY SETON NAME PLATE CO.. OR APPROVED EQUAL.

ELECTRIC MOTORS:
FURNISH HIGH EFFICIENCY MOTORS AND FOR MECHANICAL EQUIPMENT AS NOTED HEREIN. ALL MOTORS SHALL CONFORM TO THE REQUIREMENTS AS SPECIFIED IN THE ELECTRICAL DIVISION OF THIS APPLICATION.

MOTOR STARTERS AND DISCONNECTS: ALL MOTOR STARTERS AND DISCONNECTS SHALL BE FURNISHED BY THE HVAC CONTRACTOR AND INSTALLED BY THE ELECTRICAL CONTRACTOR.

REGISTERS, GRILLES AND DIFFUSERS:
FURNISH AND INSTALL DIFFUSERS, REGISTERS AND GRILLES FOR SUPPLY, RETURN AND EXHAUST OUTLETS OF SIZE, TYPE AND DESIGN AS SHOWN AND SCHEDULED ON THE DRAWINGS. EQUIPMENT SHALL BE TESTED AND RATED PER ASHRAE 70-06. EQUIPMENT SHALL HANDLE AIR QUANTITIES AT OPERATING VELOCITIES.

1. WITH MAXIMUM DIFFUSION WITHIN THE SPACE SUPPLIED OR EXHAUSTED.
2. WITHOUT OBJECTIONABLE AIR MOVEMENT.
3. WITH SOUND PRESSURE LEVEL NOT TO EXCEED NC 30.

DIFFUSERS WITHIN THE SAME ROOM OR AREA SHALL BE OF THE SAME TYPE AND STYLE TO PROVIDE ARCHITECTURAL UNIFORMITY.

REGISTERS, GRILLES AND DIFFUSERS SHALL BE MANUFACTURED BY PRICE OR APPROVED EQUAL.

SEISMIC RESTRAINT:
ALL PIPING, DUCTWORK AND EQUIPMENT SHALL BE INSTALLED AND CERTIFIED TO REMAIN IN PLACE WHEN SUBJECTED TO A SEISMIC FORCE NOT LESS THAN 0.5" GRAVITY ACCELERATION. ALL WORK SHALL COMPLY TO THE MASSACHUSETTS STATE BUILDING CODE-780 CMR, EARTHQUAKE CONTROL.

APPLICABILITY:
1. ALL DUCTS OF A CROSS SECTIONAL AREA OF 6 SQUARE FT. AND LARGER
2. ALL ROOF MOUNTED EQUIPMENT
3. ALL PIPING OF 2-1/2" IN DIAMETER AND LARGER
4. ALL GAS PIPING OF 1" DIAMETER AND LARGER
5. ALL PIPING OF 1-1/4" AND LARGER IN THE BOILER ROOM
6. ALL RUNS OF PIPING AND DUCTWORK AT 40 FEET AND LONGER HAVING A HANGER LENGTH OF 12" OR MORE ON ANY PORTION OF THE RUN

BRACING: PIPING AND DUCTWORK IN EXCESS OF 40 FEET OF STRAIGHT RUN AND HAVING A HANGER LENGTH OF 12" OR MORE ON ANY PART OF THE STRAIGHT RUN SHALL HAVE TRAVERSE BRACES AT THE RATE OF ONE BRACE PER 40 FEET OF STRAIGHT RUN.

PIPING AND DUCTWORK IN EXCESS OF 80 FEET OF STRAIGHT RUN AND HAVING A HANGER LENGTH OF 12" OR MORE ON ANY PART OF THE RUN SHALL HAVE TRAVERSE BRACES AT THE RATE OF ONE BRACE PER 40 FEET OF STRAIGHT RUN AND LONGITUDINAL BRACES AT THE RATE OF ONE BRACE PER 80 FEET OF STRAIGHT RUN.

REVISIONS

REV	DATE	DESCRIPTION	DRAWN	CHKD
8				
7				
6				
5				
4				
3				
2				
1				

ENGINEERS STAMP

MECHANICAL ENGINEER

STEVE SMITH

MECHANICAL ENGINEER

QUINCY, MA

OWNER

LEGACY BUILDERS

11 PLACID ROAD

NEWTON, MA

PROJECT TITLE & ADDRESS

MULTI-FAMILY RESIDENCE

12 POND ST

DRAWING DESCRIPTION

MECHANICAL HVAC GENERAL NOTES

-

PROJECT #	XXXX-XXXX	SHEET	M-01
DATE	02/24/2020		
SCALE	NTS		

8 7 6 5 4 3 2 1

E D C B A

HVAC SPECIFICATION						
UNIT NO.	UNIT NO.	SIZE (TON)	TRANE AIR COND.	CONDENSER WEIGHT	TRANE AIR HANDLER	TRANE FURNACE
201	CU-1	2.5	4TTR6030J	184 LBS	TEM4A0B30S31SA	TUH2B060A9V3V3
202	CU-2	2.0	4TTR6024J	162 LBS	TEM4A0B24S21SA	TUH2B060A9V3V3
203	CU-3	2.0	4TTR6024J	162 LBS	TEM4A0B24S21SA	TUH2B060A9V3V3
204	CU-4	2.5	4TTR6030J	184 LBS	TEM4A0B30S31SA	TUH2B060A9V3V3
205	CU-5	2.5	4TTR6030J	184 LBS	TEM4A0B30S31SA	TUH2B060A9V3V3
206	CU-6	2.0	4TTR6024J	162 LBS	TEM4A0B24S21SA	TUH2B060A9V3V3
207	CU-7	2.0	4TTR6024J	162 LBS	TEM4A0B24S21SA	TUH2B060A9V3V3
208	CU-8	2.5	4TTR6030J	184 LBS	TEM4A0B30S31SA	TUH2B060A9V3V3
301	CU-9	2.5	4TTR6030J	184 LBS	TEM4A0B30S31SA	TUH2B060A9V3V3
302	CU-10	2.0	4TTR6024J	162 LBS	TEM4A0B24S21SA	TUH2B060A9V3V3
302	CU-11	2.0	4TTR6024J	162 LBS	TEM4A0B24S21SA	TUH2B060A9V3V3
304	CU-12	2.5	4TTR6030J	184 LBS	TEM4A0B30S31SA	TUH2B060A9V3V3
305	CU-13	2.5	4TTR6030J	184 LBS	TEM4A0B30S31SA	TUH2B060A9V3V3
306	CU-14	2.0	4TTR6024J	162 LBS	TEM4A0B24S21SA	TUH2B060A9V3V3
307	CU-15	2.0	4TTR6024J	162 LBS	TEM4A0B24S21SA	TUH2B060A9V3V3
308	CU-16	2.5	4TTR6030J	184 LBS	TEM4A0B30S31SA	TUH2B060A9V3V3
MAIN LOBBY	CU-17	2.0	4TTR6024J	162 LBS	TEM4A0B24S21SA	TUH2B060A9V3V3
COMMERCIAL SPACE 1	CU-18	6.0	TVA073D3	360	TVE072A3B	HEAT PUMP/ELC. HEAT 25KW
COMMERCIAL SPACE 2	CU-19	3.0	4TTR6036S	208	TEM4A0B36S41SA	HEAT PUMP/ELC. HEAT 10KW
COMMERCIAL SPACE 3	CU-20	3.0	4WV3036A3	208	TEM4A0B36S41SA	HEAT PUMP/ELC. HEAT 10KW
COMMERCIAL SPACE 4	CU-21	6.0	4TTR6036S	360	TVE072A3B	HEAT PUMP/ELC. HEAT 25KW

FANS SPECIFICATION					
UNIT NO.	MANUFACTURER	MODEL NO.	FAN TYPE	CFM RATING	NOTES
EF-001	GREENHECK	TCB-1-22	CENTRIFUGAL TUBULAR	6835	EQUIPPED WITH VARIABLE DRIVE MOTOR VARIABLE DRIVE, MODEL NO. DS-3-36-75LV-V-G3
EF-002	GREENHECK	TCB-1-22	CENTRIFUGAL TUBULAR	6835	EQUIPPED WITH VARIABLE DRIVE MOTOR VARIABLE DRIVE, MODEL NO. DS-3-36-75LV-V-G3
EF-003	GREENHECK	TCB-1-22	CENTRIFUGAL TUBULAR	6835	EQUIPPED WITH VARIABLE DRIVE MOTOR VARIABLE DRIVE, MODEL NO. DS-3-36-75LV-V-G3
EF-004	GREENHECK	TCB-1-22	CENTRIFUGAL TUBULAR	6835	EQUIPPED WITH VARIABLE DRIVE MOTOR VARIABLE DRIVE, MODEL NO. DS-3-36-75LV-V-G3
EF-005	GREENHECK	GJX-41-160-0616	AXIAL TRANSFER	5050	EQUIPPED WITH VARIABLE DRIVE MOTOR VARIABLE DRIVE, MODEL NO. DS-3-36-75LV-V-G3
EF-006	GREENHECK	GJX-41-160-0616	AXIAL TRANSFER	5050	EQUIPPED WITH VARIABLE DRIVE MOTOR VARIABLE DRIVE, MODEL NO. DS-3-36-75LV-V-G3

HVAC SPECIFICATION			
UNIT NO.	MANUFACTURER	MODEL NO.	NOTES
L-001	GREENHECK	SED-401	THERMOSTATICALLY REACTIVATED ELEVATOR INTAKE/EXHAUST FAN WITH AMCA LICENSED PERF. DATA
AC-001	GREENHECK	DGX-P120-H02-MF	CONSTANT VOLUME 100% OUTSIDE AIR, GAS FIRED INDIRECT, 3HP MIN
AC-002	GREENHECK	DGX-P120-H02-MF	CONSTANT VOLUME 100% OUTSIDE AIR, GAS FIRED INDIRECT, 3HP MIN
HT-001	MIDENE	HT-HEK30	208V 3-PH
HT-002	MIDENE	HT-HEK30	208V 3-PH
HT-003	MIDENE	HT-HEK30	208V 3-PH

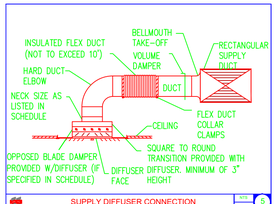

SUPPLY DIFFUSER CONNECTION — NTS — 5

DUCT SIZE	HOLE SIZE	MINIMUM DUCT HEIGHT
5"	8"	9"
6"	9"	10"
7"	10"	11"
8"	11"	12"
9"	12"	13"
10"	13"	14"
12"	15"	16"
14"	17"	18"
16"	19"	20"

ALTERNATE ROUND BRANCH DUCT TAKE-OFFS

* ALTERNATE FITTING'S TO BE USED WHEN DUCT HEIGHT DOES NOT PERMIT THE USE OF THE FULL SIZE BELL MOUTH

LEGEND — NTS — 6

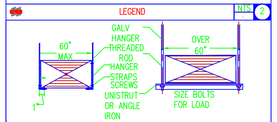

NOTES:

1. ON DUCTS OVER 48" WIDE, BOTTOM SHALL BE BRACED BY ANGLE. FOR CROSS SECTION AREAS MORE THAN 8 SQ FT, DUCT SHALL BE BRACED BY ANGLES ON ALL FOUR SIDES.

2. SUPPORTS SHALL BE SPACED AND SIZED AS PER SMACNA STANDARDS.

DUCT HANGER SUPPORT — NTS — 4

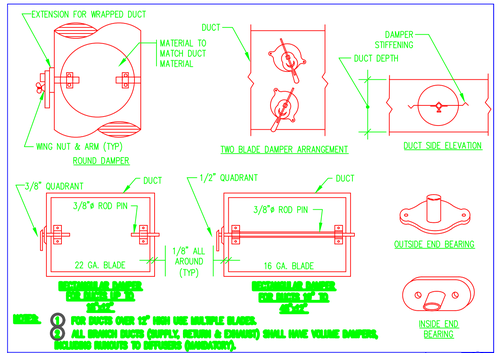

NOTE: 8 FOR DUCTS OVER 12" HIGH USE MULTIPLE BLADES.
8 ALL BRANCH DUCTS (SUPPLY, RETURN & EXHAUST) SHALL HAVE VOLUME DAMPERS, INCLUDING RUNOUTS TO DIFFUSERS (MANDATORY).

VOLUME DAMPER (SINGLE BLADE) — NTS — 1

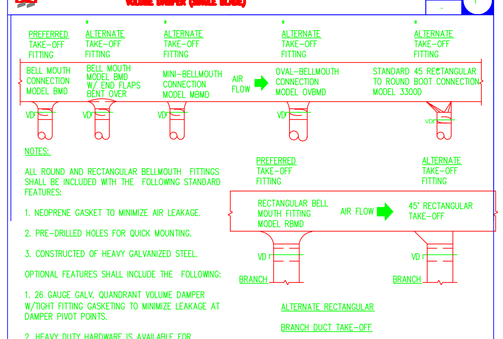

VOLUME DAMPER (SINGLE BLADE) — NTS — 1

LEGEND:

	SUPPLY DIFFUSER (6"X12")
	SUPPLY SLOT DIFFUSER (48"X2")
	SUPPLY DIFFUSER (12"X12")
	RETURN REGISTER/EXHAUST
	RIGID DUCT
	RIGID DUCT REDUCER
	FLEXIBLE METAL DUCT
T	THERMOSTAT
CFM	CUBIC FEET PER MINUTE
SA	SUPPLY AIR
RA	RETURN AIR
OA	OUTDOOR AIR
TON	COOLING CAPACITY (12,000 BTU PER HOUR)
BTU	BRITISH THERMAL UNIT
RTU	ROOF TOP UNIT
AHU	AIR HANDLING UNIT

REVISIONS				
REV	DATE	DESCRIPTION	DRAWN	CHKD
8				
7				
6				
5				
4				
3				
2				
1				

ENGINEERS STAMP

MECHANICAL ENGINEER

STEVE SMITH

MECHANICAL ENGINEER

QUINCY, MA

OWNER

LEGACY BUILDERS

11 PLACID ROAD

NEWTON, MA

PROJECT TITLE & ADDRESS

MULTI-FAMILY RESIDENCE

12 POND ST

DRAWING DESCRIPTION

MECHANICAL HVAC SCHEDULE AND DETAILS

-

PROJECT #	XXXX-XXXX	SHEET
DATE	02/24/2020	M-02
SCALE	NTS	

8 7 6 5 4 3 2 1

E D C B A

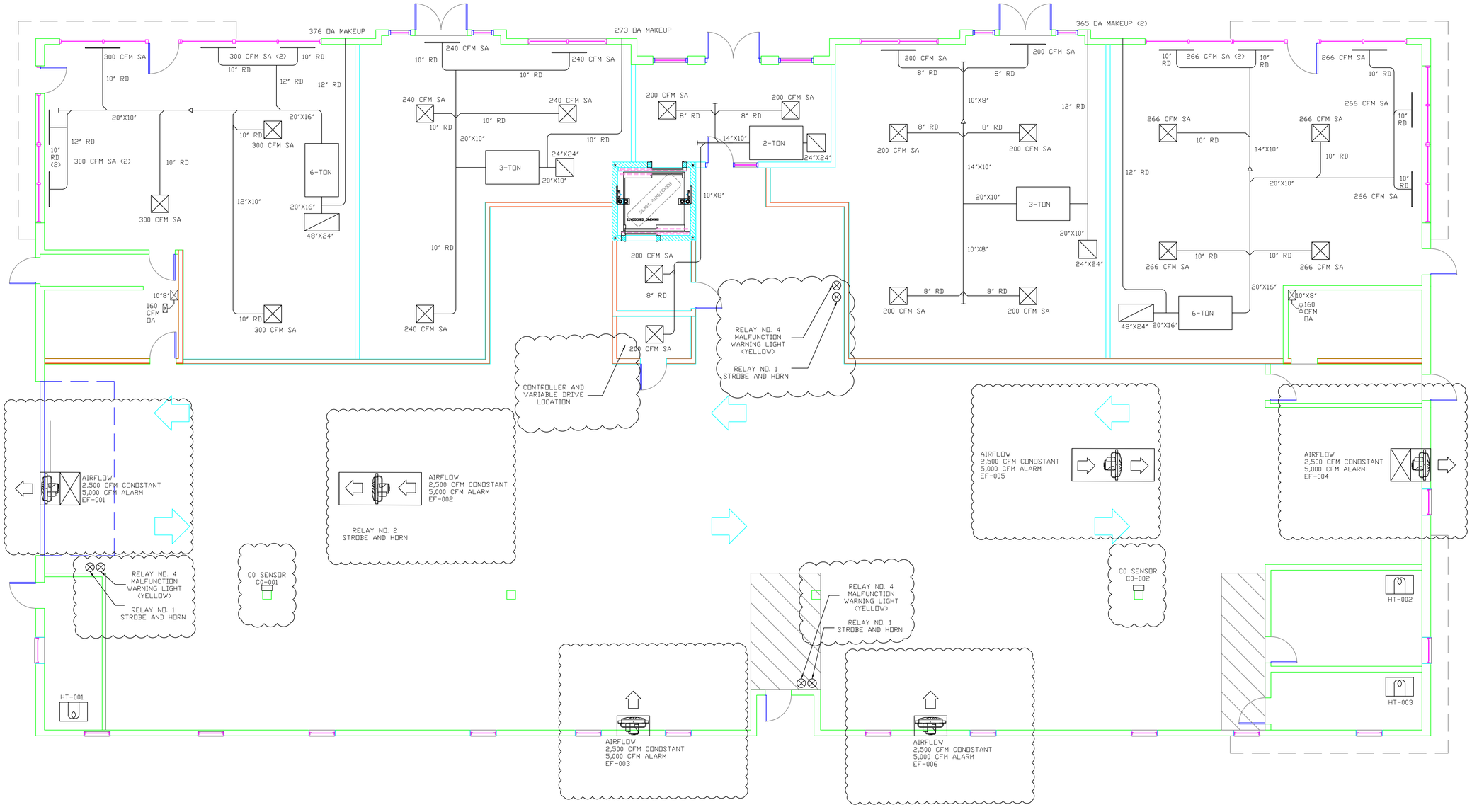

REVISIONS				
8				
7				
6				
5				
4				
3				
2				
1				
REV	DATE	DESCRIPTION	DRAWN	CHKD

ENGINEERS STAMP

MECHANICAL ENGINEER

STEVE SMITH

MECHANICAL ENGINEER

QUINCY, MA

OWNER

LEGACY BUILDERS

11 PLACID ROAD

NEWTON, MA

PROJECT TITLE & ADDRESS

MULTI-FAMILY RESIDENCE

12 POND ST

DRAWING DESCRIPTION

MECHANICAL HVAC

GARAGE FLOOR PLAN

DIAGRAM

-

PROJECT #	XXXX-XXXX	SHEET	M-03
DATE	02/24/2020		
SCALE	NTS		

E D C B A

8 7 6 5 4 3 2 1

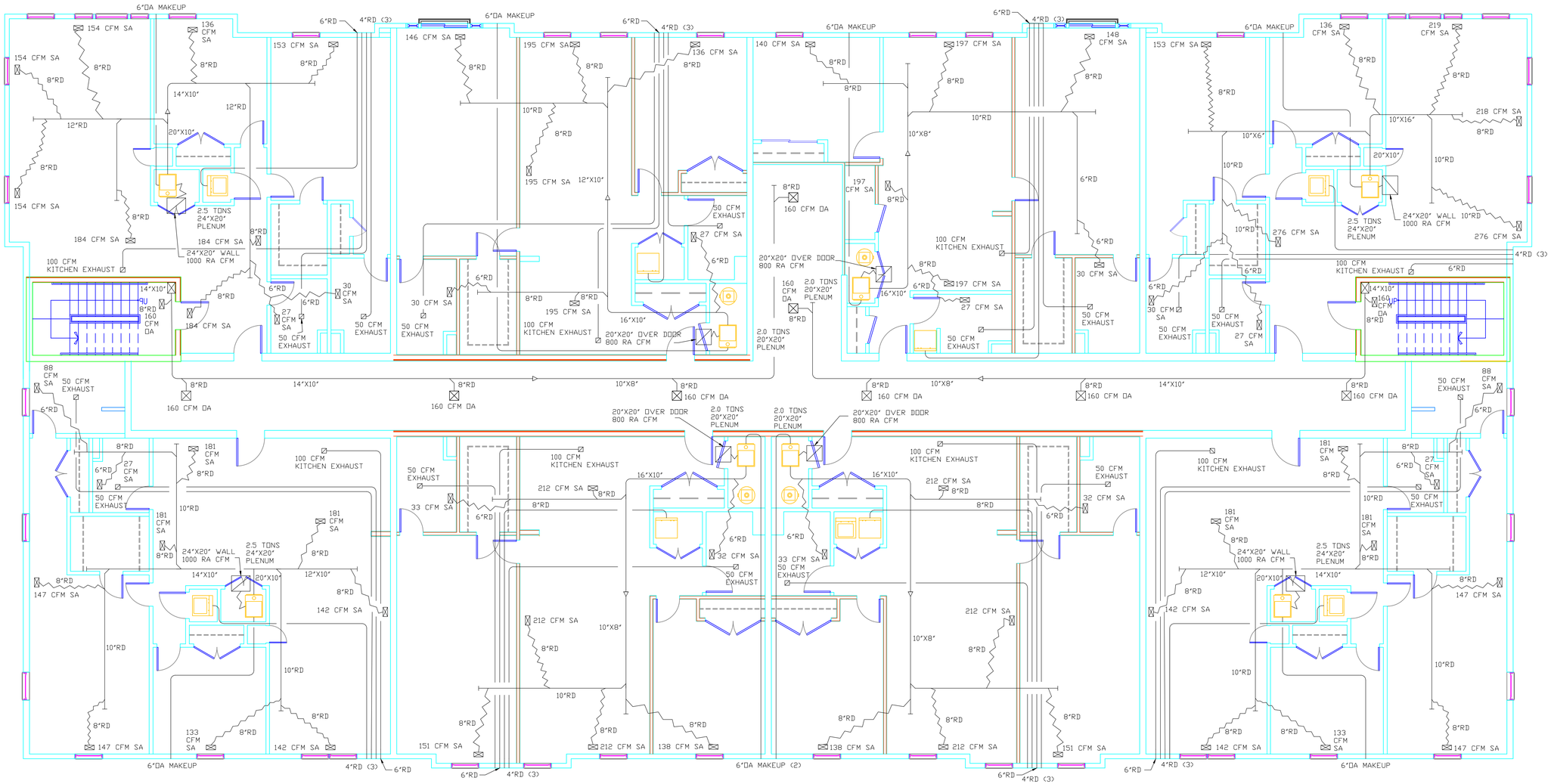

REVISIONS				
8				
7				
6				
5				
4				
3				
2				
1				
REV	DATE	DESCRIPTION	DRAWN	CHKD

ENGINEERS STAMP

MECHANICAL ENGINEER

STEVE SMITH

MECHANICAL ENGINEER

QUINCY, MA

OWNER

LEGACY BUILDERS

11 PLACID ROAD

NEWTON, MA

PROJECT TITLE & ADDRESS

MULTI-FAMILY RESIDENCE

12 POND ST

DRAWING DESCRIPTION

MECHANICAL HVAC SECOND FLOOR PLAN DIAGRAM

-

PROJECT #	XXXX-XXXX	SHEET	M-04
DATE	02/24/2020		
SCALE	NTS		

E D C B A

8 7 6 5 4 3 2 1

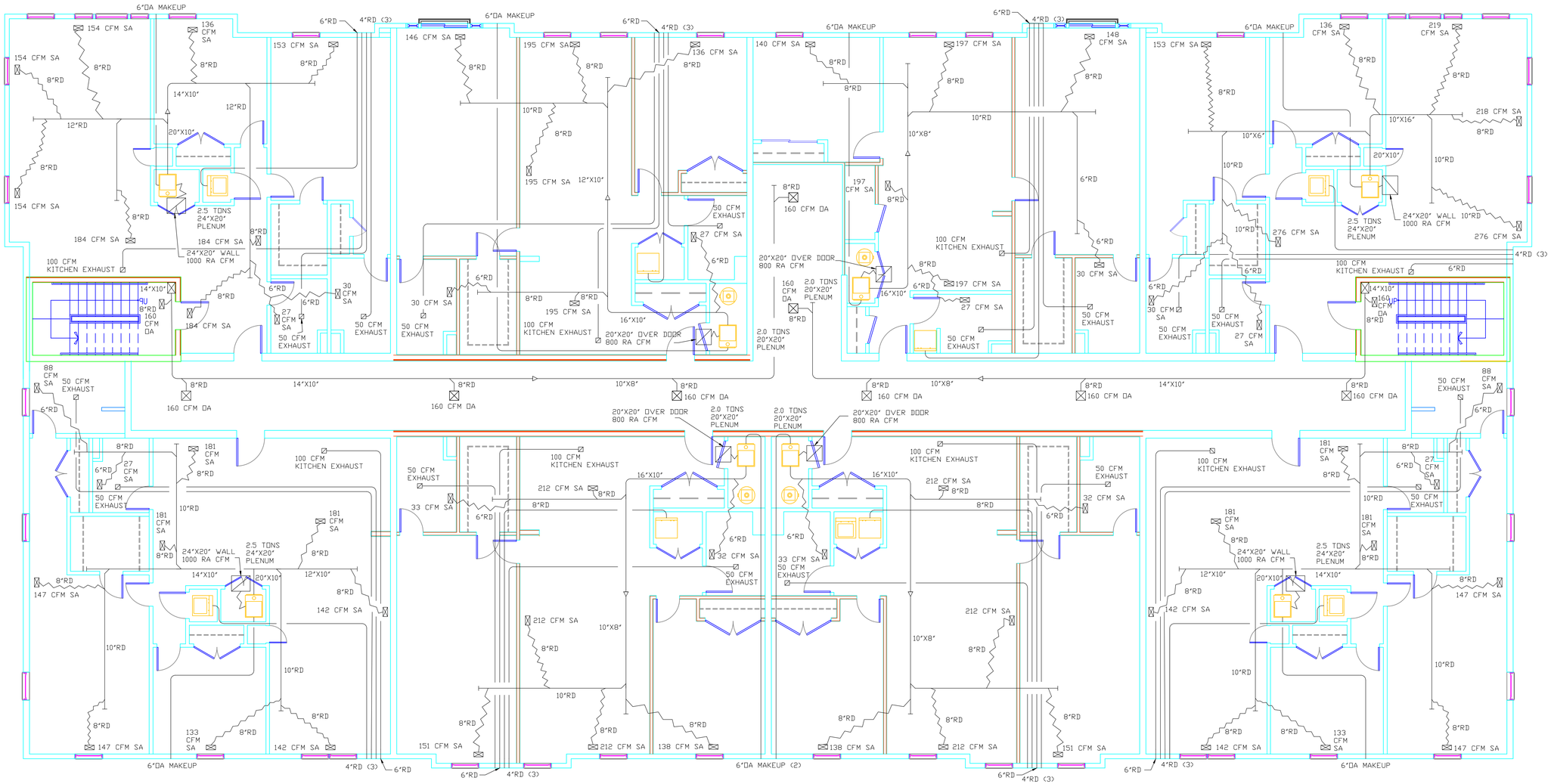

REVISIONS				
8				
7				
6				
5				
4				
3				
2				
1				
REV	DATE	DESCRIPTION	DRAWN	CHKD

ENGINEERS STAMP

MECHANICAL ENGINEER

STEVE SMITH

MECHANICAL ENGINEER

QUINCY, MA

OWNER

LEGACY BUILDERS

11 PLACID ROAD

NEWTON, MA

PROJECT TITLE & ADDRESS

MULTI-FAMILY RESIDENCE

12 POND ST

DRAWING DESCRIPTION

MECHANICAL HVAC

THIRD FLOOR PLAN

DIAGRAM

-

PROJECT #	XXXX-XXXX
DATE	02/24/2020
SCALE	NTS

SHEET

M-05

8 7 6 5 4 3 2 1

E D C B A

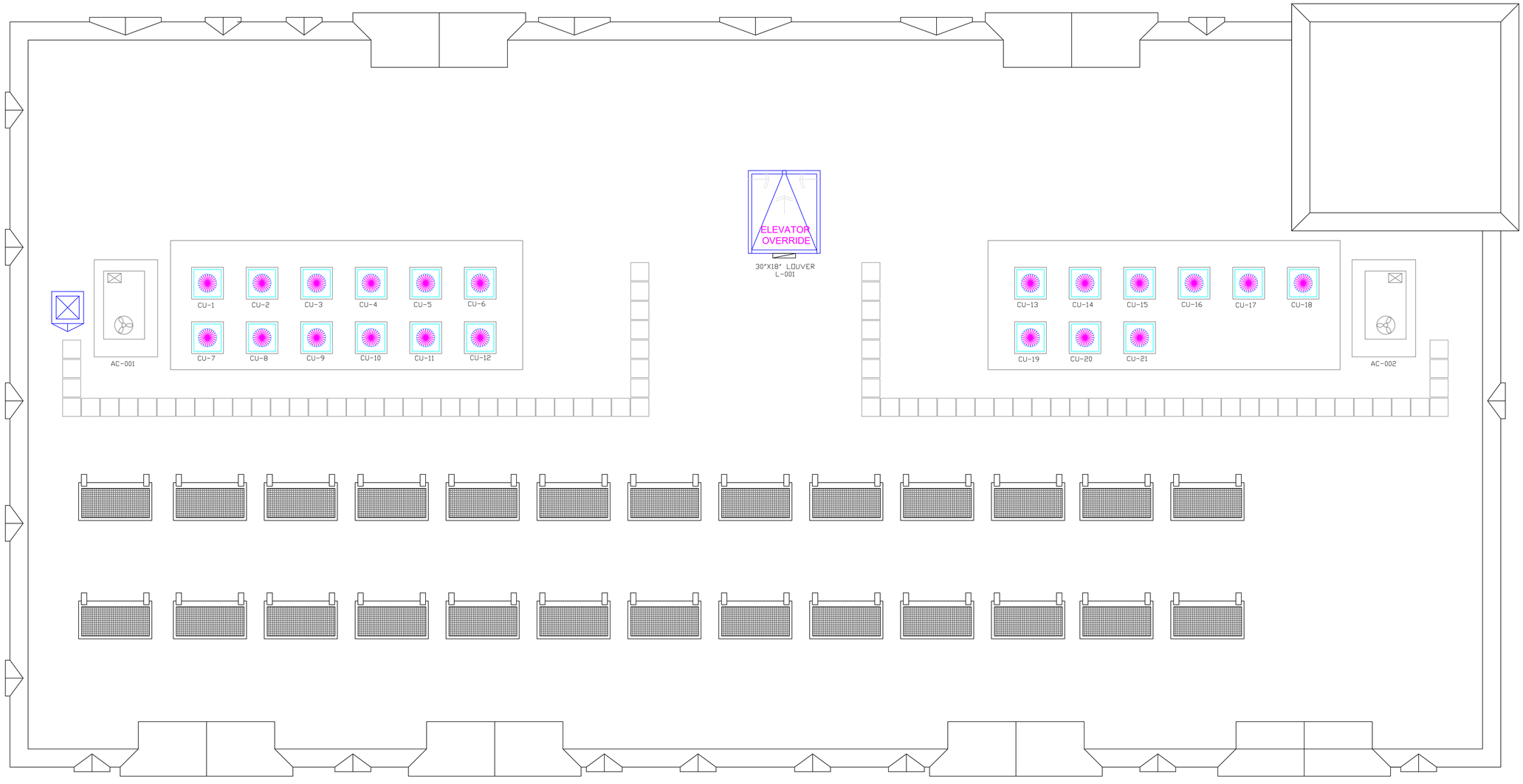

REVISIONS				
8				
7				
6				
5				
4				
3				
2				
1				
REV	DATE	DESCRIPTION	DRAWN	CHKD

ENGINEERS STAMP

MECHANICAL ENGINEER

STEVE SMITH

MECHANICAL ENGINEER

QUINCY, MA

OWNER

LEGACY BUILDERS

11 PLACID ROAD

NEWTON, MA

PROJECT TITLE & ADDRESS

MULTI-FAMILY RESIDENCE

12 POND ST

DRAWING DESCRIPTION

MECHANICAL HVAC

ROOF PLAN

DIAGRAM

-

PROJECT #	XXXX-XXXX	SHEET	M-06
DATE	02/24/2020		
SCALE	NTS		

8 7 6 5 4 3 2 1

E D C B A

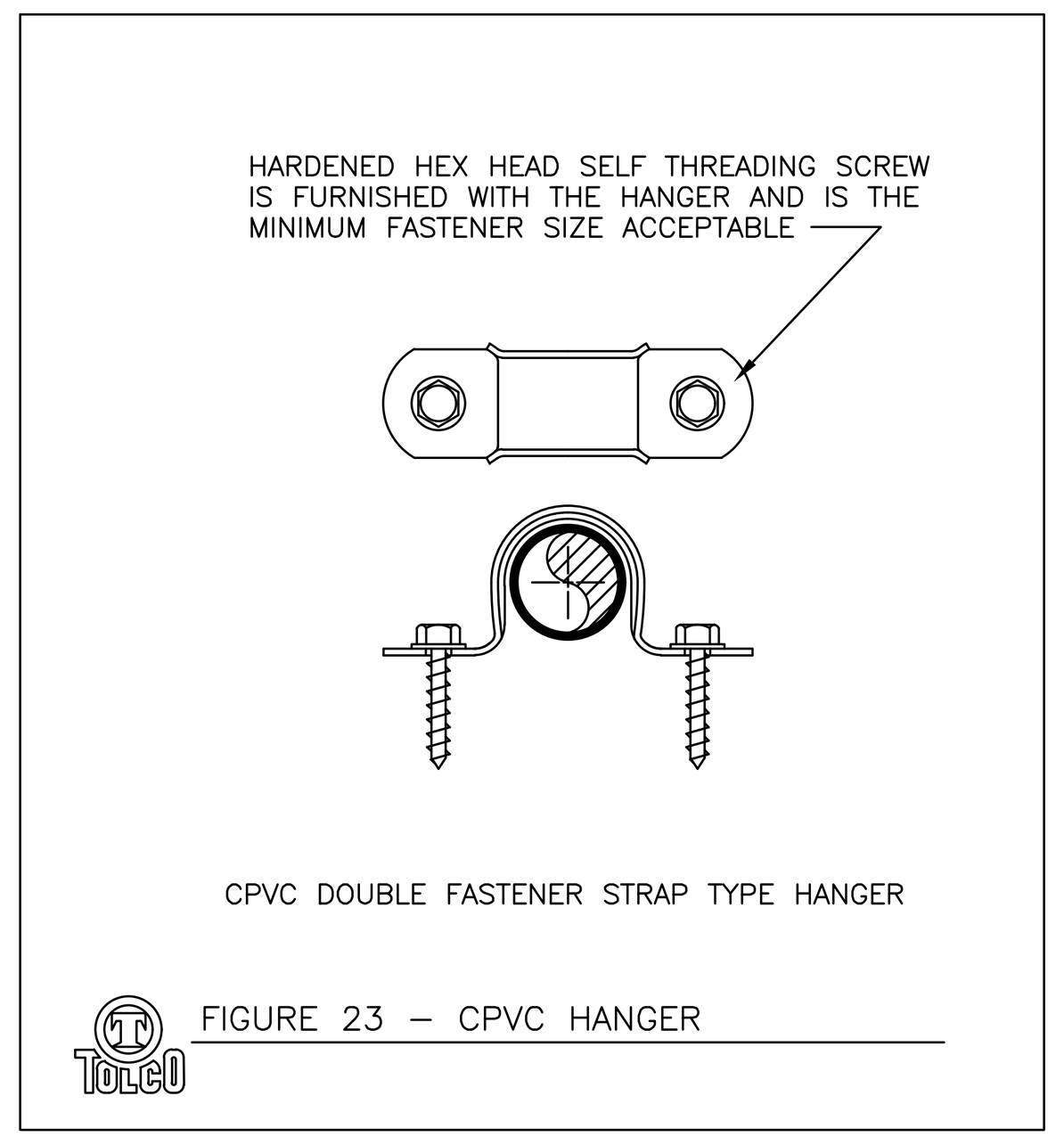

FIGURE 23 – CPVC HANGER

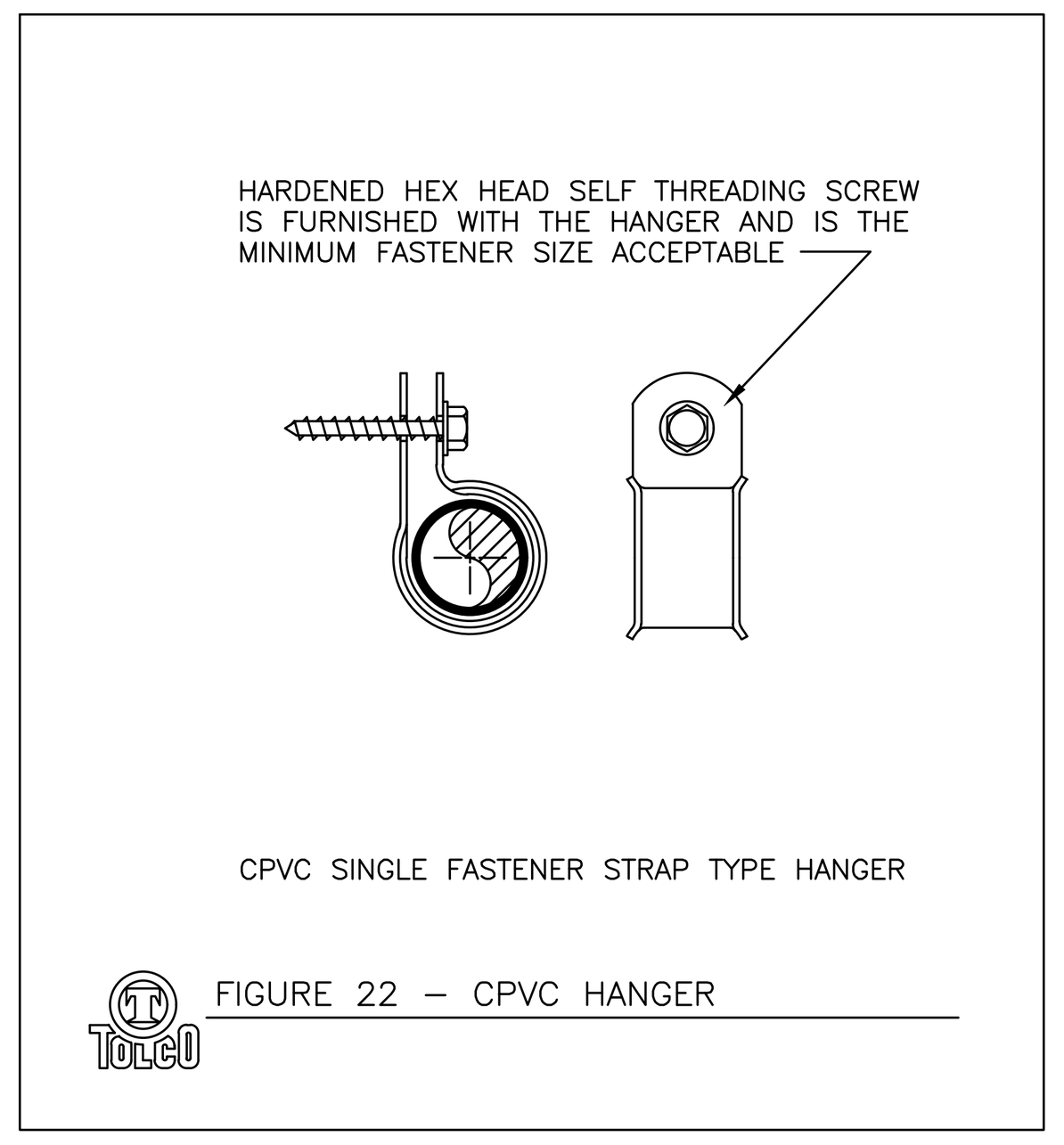

FIGURE 22 – CPVC HANGER

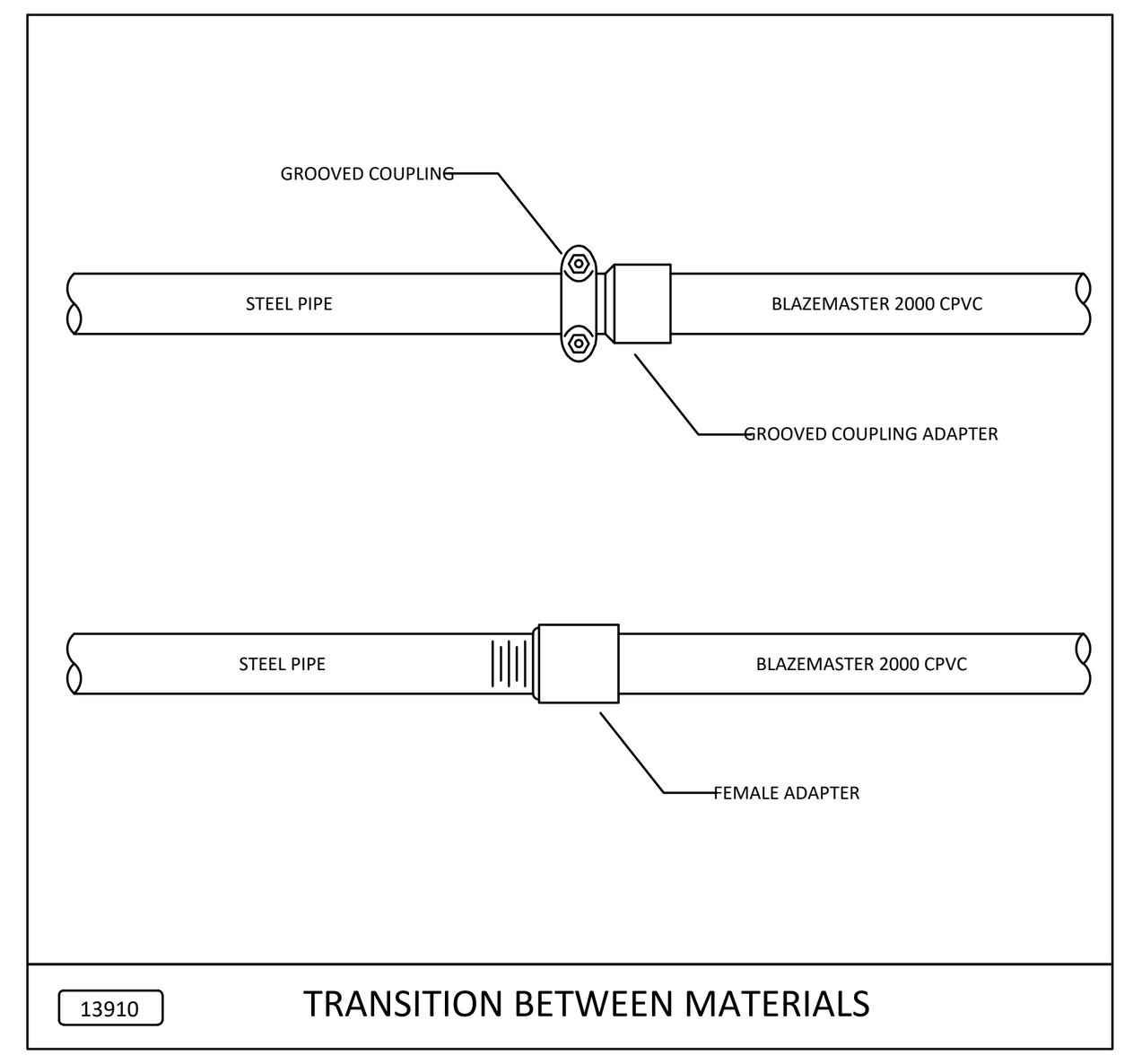

TRANSITION BETWEEN MATERIALS

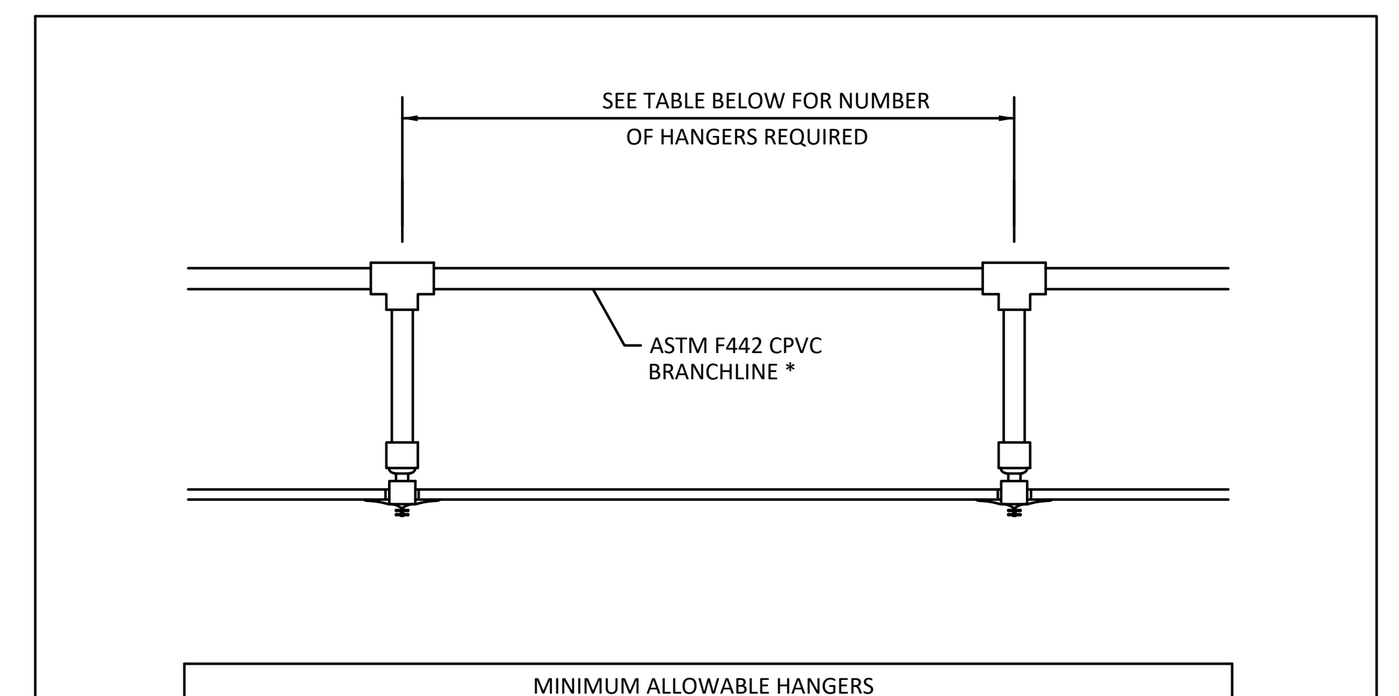

MINIMUM ALLOWABLE HANGERS PER LENGTH OF PIPE

PIPE SIZE inches	Pipe Length 1 Hanger	2 Hangers	3 Hangers
3/4"	0'-0" TO 5'-6"	5'-7" TO 11'-0"	11'-1" TO 16'-6"
1"	0'-0" TO 6'-0"	6'-1" TO 12'-0"	12'-1" TO 18'-0"
1-1/4"	0'-0" TO 6'-6"	6'-7" TO 13'-0"	13'-1" TO 19'-6"
1-1/2"	0'-0" TO 7'-0"	7'-1" TO 14'-0"	14'-1" TO 21'-0"
2"	0'-0" TO 8'-0"	8'-1" TO 16'-0"	16'-1" TO 24'-0"
2-1/2"	0'-0" TO 9'-0"	9'-1" TO 18'-0"	18'-1" TO 27'-0"
3"	0'-0" TO 10'-0"	10'-1" TO 20'-0"	20'-1" TO 30'-0"

* NATIONAL SANITATION FOUNDATION (NSF) APPROVED FOR USE WITH POTABLE WATER

MINIMUM ALLOWABLE HANGERS

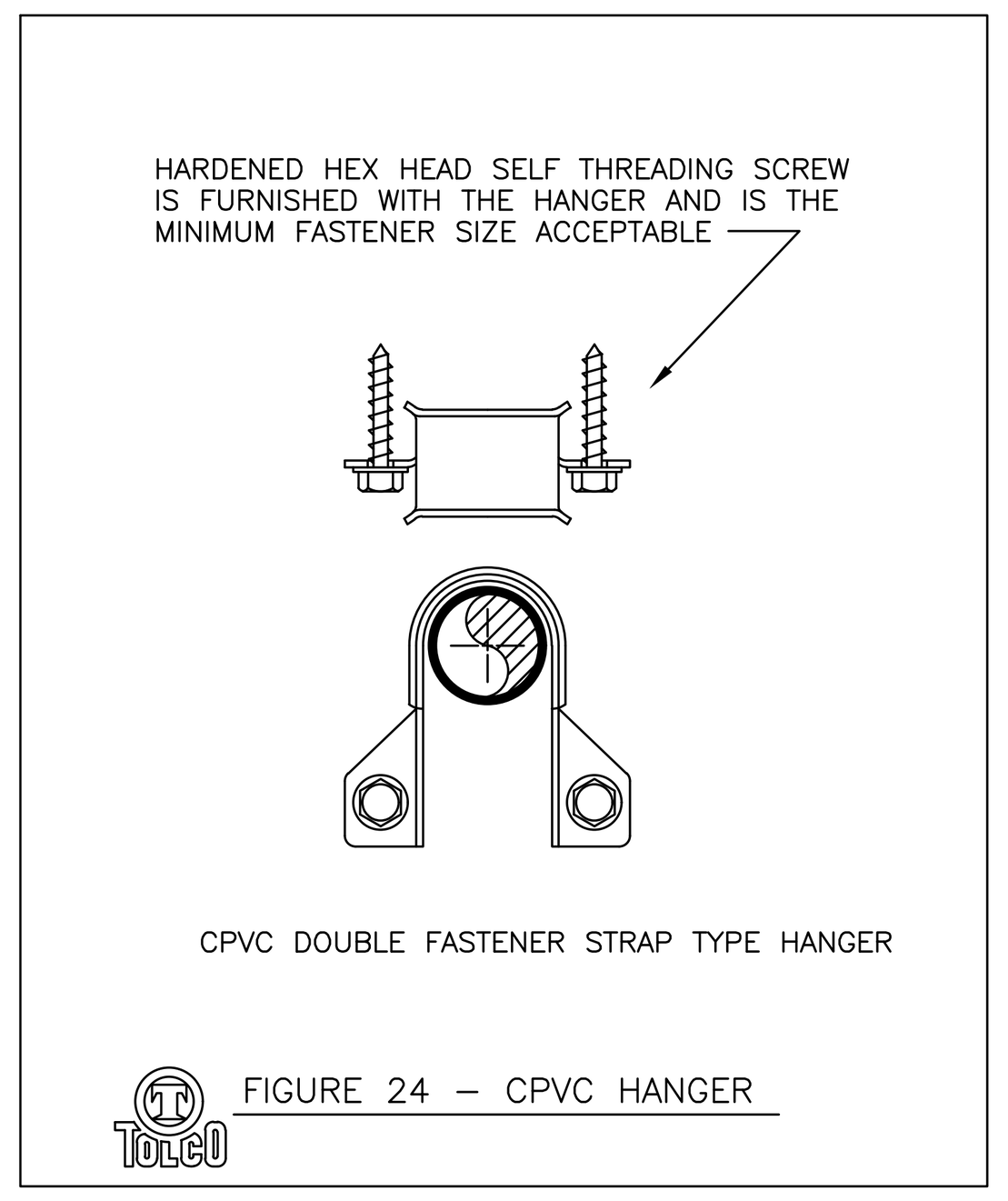

FIGURE 24 – CPVC HANGER

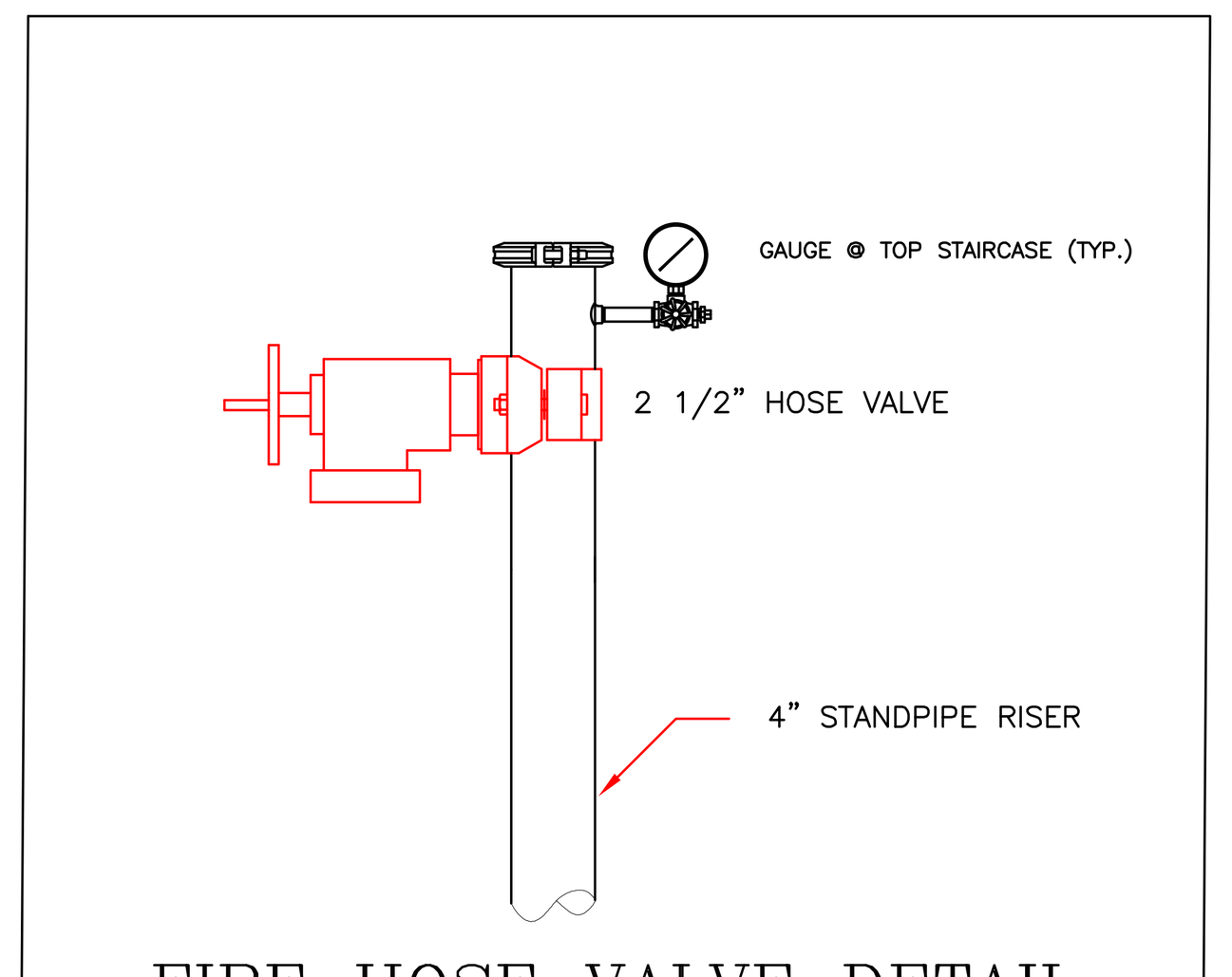

FIRE HOSE VALVE DETAIL
SCALE: NONE

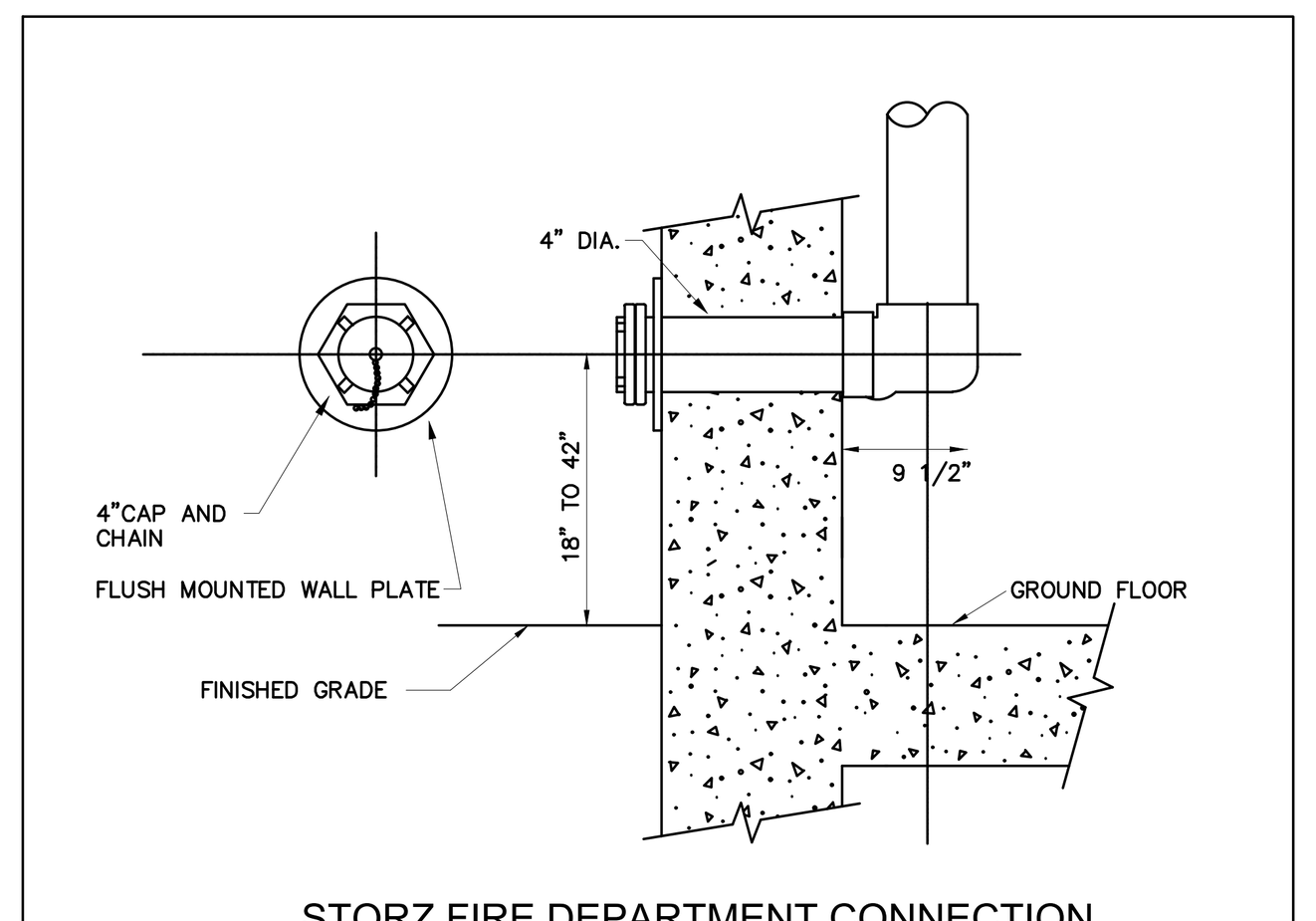

STORZ FIRE DEPARTMENT CONNECTION DIAGRAM

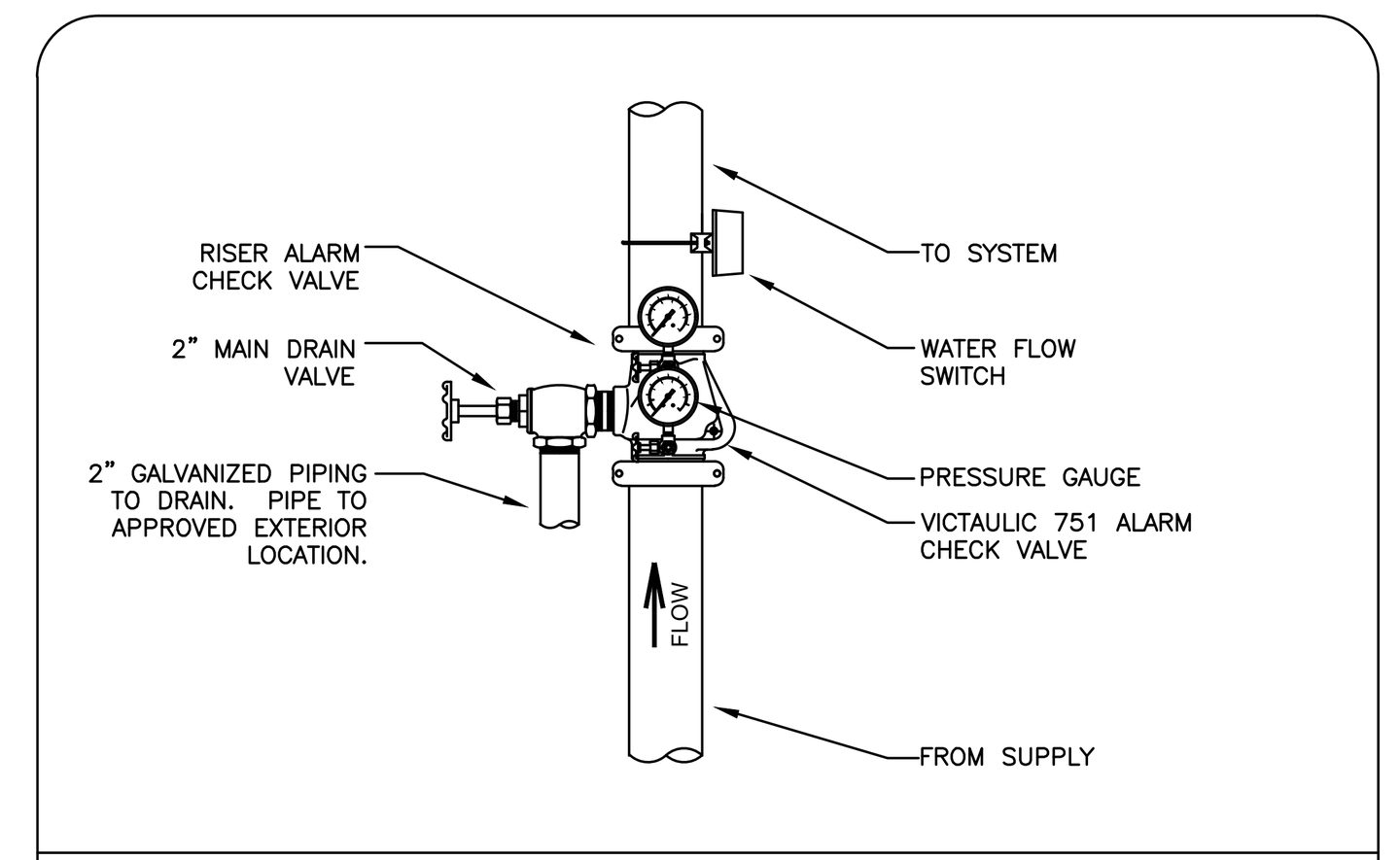

WET SYSTEM RISER N.T.S.

FIRE PROTECTION GENERAL NOTES

1. FIRE PROTECTION SYSTEM TO COMPLY WITH CMR 780, CHAPTER 9, NFPA 13, AND ALL APPLICABLE STATE AND LOCAL CODES.
2. ADHERE TO AND OBTAIN ALL PERMITS, LICENSES AND GOVERNMENT REQUIREMENTS.
3. FINAL INSPECTION AND APPROVAL BY LOCAL FIRE DEPARTMENT, AND ARCHITECT/ENGINEER.
5. CUTTING OF STRUCTURAL AND/OR ARCHITECTURAL MEMBERS TO BE DONE ONLY WITH THE WRITTEN APPROVAL OF THE ARCHITECT.
6. FLOW TEST: SEE DETAIL FP–1.
7. PIPE ROUTING SHOWN SHALL BE USED AND ANY ADDITIONAL OFFSETS OR FITTINGS REQUIRED FOR PROPER INSTALLATION, COORDINATION WITH OTHER TRADES, AND/OR TO MAINTAIN PROPER CLEARANCES SHALL BE PROVIDED. VERIFY EXISTING STRUCTURAL, MECHANICAL, ELECTRICAL INSTALLATIONS AND AVOID ANY/ALL OBSTRUCTIONS OR INTERFERENCES WITH FIRE PROTECTION PIPE ROUTING.
8. FIRE STOP ALL PENETRATIONS OF SMOKE/FIRE WALLS, CEILINGS, FLOORS, ROOFS, ETC. FLASH AND COUNTERFLASH ROOF PENETRATIONS. (SEE FIRE RATED PIPE PENETRATION DETAIL).
9. PROVIDE ACCESS PANELS TO ALL VALVES ABOVE NON–ACCESSIBLE CEILINGS AND CHASES.
10. SPRINKLER HEADS ARE TO BE COORDINATED WITH ALL EXISTING/NEW DIFFUSERS, SPEAKERS, LIGHTING FIXTURES AND CEILING SYSTEMS.
11. PROVIDE STOCK OF EXTRA SPRINKLERS IN ACCORDANCE WITH N.F.P.A. 13 3–16.7.
12. METHODS OF HANGING PIPES, HEADERS AND BRANCHES SHALL BE IN ACCORDANCE WITH N.F.P.A. 13.
13. AUTOMATIC SPRINKLER TEMPERATURE RATINGS OF FUSIBLE ELEMENTS TO BE IN ACCORDANCE WITH N.F.P.A. 13.
14. ALL VALVES FOR FIRE SERVICE SHALL BE LISTED BY THE UNDERWRITER'S LABORATORIES, INC. AND THE FACTORY MUTUAL LABORATORIES. VALVES SHALL BE FACTORY MARKED "UL" AND "FM", 175 WORKING PRESSURE.
15. ALL VALVES ON THE FIRE PROTECTION SYSTEM TO BE ELECTRICALLY SUPERVISED. TYPE AND EXACT LOCATION OF FLOW, PRESSURE AND SUPERVISORY SWITCHES SHALL BE ACCOMPLISHED BETWEEN THE DIFFERENT RESPONSIBILE TRADES.
16. ALL POWER WIRING SHALL BE ACCOMPLISHED UNDER THE ELECTRICAL DIVISION. ALL CONTROL AND INTERLOCK WIRING SHALL BE ACCOMPLISHED UNDER THIS SECTION OF THE SPECIFICATIONS IN ACCORDANCE WITH THE REQUIREMENTS IN THE ELECTRICAL DIVISION. COORDINATE ALL ELECTRICAL ITEMS WITH ELECTRICAL CONTRACTOR AND INSURE PROPER COORDINATION.
17. A SPRINKLER HEAD SHALL BE INSTALLED NO FURTHER THAN 7'–6" FROM EITHER SIDE OF A MAGNETICALLY HELD OPEN SMOKE DOOR. (IF APPLICABLE)
18. PROVIDE A PERMANENTLY ATTACHED NAME TAG STATING THE REQUIRED DESIGN CRITERIA FOR EACH HYDRAULICALLY DESIGNED SYSTEM.
19. SPRINKLERS SHALL COVER THE ENTIRE AREA OF THE ROOM INCLUDING ALCOVES. SPRAY SHALL NOT BE BLOCKED BY WALLS OR PARTITIONS PER NFPA.
20. ALL SPRINKLER HEADS MOUNTED IN CEILING SHALL BE LOCATED A MINIMUM OF 4" AWAY FROM ANY WALLS, CEILING HEIGHT CHANGES OR ANY OTHER VERTICAL INTERSECTING SURFACE.
21. PIPE SHALL BE REAMED AND CLEANED BEFORE ASSEMBLY
22. MAINTAIN A MINIMUM OF 18 INCHES FROM THE BOTTOM OF THE SPRINKLER DEFLECTOR TO THE TOP OF STORAGE/FILE STORAGE.
23. PROVIDE SYSTEM(S) WITH FLUSHING CONNECTION(S).
24. PROVIDE SPRINKLERS ABOVE AND BELOW EXPOSED DUCTWORK 4 FEET OR WIDER.
25. PROVIDE HEAD GUARDS ON SPRINKLER HEADS IN ELECTRIC, TELEPHONE ROOMS
26. INSPECTOR'S TEST VALVE SHALL NOT EXCEED 7 FEET ABOVE THE FINISHED FLOOR.
27. THREADED SPRINKLER PIPE WILL BE SCHEDULE #40 BLACK A53.
28. GROOVED SPRINKLER PIPE 1–1/2" – 8" TO BE SCHEDULE #10 BLACK A135.

MISCELLANEOUS NOTES:

1) ALL THREADED PIPING WILL BE SCHEDULE 40 A53.
2) PIPING FROM 1 ½" AND UP WILL BE SCHEDULE 10 A135.
3) THREADED FITTINGS WILL BE BLACK CAST IRON (UL/FM)
4) ALL GROOVED MATERIALS BY VICTAULIC OR EQUAL.
5) ALL HANGERS WILL BE UL–LISTED & FM APPROVED.
6) PIPE & FITTINGS WITHIN RESIDENTIAL FLOORS WILL BE BLAZE MASTER CPVC OR EQUAL.

BUILDING DESCRIPTION & USAGE:

THIS IS A NEW THREE STORY WOOD FRAMED BUILDING WITH A FLAT ROOF AND A MIXED–USE OCCUPANCY CLASSIFICATION. THIS BUILDING HAS TWO LEVELS OF RESIDENTIAL APARTMENTS (16 UNITS) WITH THE FIRST FLOOR CONSISTING OF FOUR (4) RETAIL SPACES AND A PARKING GARAGE. THE PARKING GARAGE WILL HAVE MECHANICAL LIFTS TO PROVIDE THE STACKING OF AUTOMOBILES UP TO TWO HIGH. THE TOTAL SQUARE FOOTAGE OF THE RESIDENTIAL FLOORS IS 25,570, RETAIL AREA'S 5,260, AND THE PARKING GARAGE IS 7,600. GARAGE AREA HAS AUTOMATED MECHANICAL PARKING LIFTS FOR TWO LEVELS OF CARS. THE TOTAL SQUARE FOOTAGE OF THE ENTIRE BUILDING IS 38,625. THE FINISHED FLOOR HEIGHT TO THE TOP MOST OCCUPIED STORY IS 25'–0 AND LESS THAN 30'–0 FROM LOWEST FIRE DEPT VEHICLE ACCESS.

DESIGN METHODOLOGY / SCOPE OF WORK:

A NEW WET AUTOMATIC FIRE SPRINKLER & CLASS 1 STANDPIPE SYSTEM IS TO BE PROVIDED THROUGHOUT THE ENTIRE BUILDING IN ACCORDANCE WITH MGL, 780 CMR CHAPTER 9 AND NFPA 13, AND 14. EACH RESIDENTIAL LEVEL WILL HAVE A ZONE CONTROL ASSEMBLY LOCATED IN THE STAIRCASE. THE RETAIL SPACES WILL HAVE ZONE CONTROLS AS WELL BASED ON EACH SIDE OF THE BUILDING. THE PARKING GARAGE WILL HAVE IT'S OWN DEDICATED ZONE CONTROL. INTERSTITIAL SPRINKLERS WILL BE PROVIDED THROUGHOUT EACH LEVEL. A NEW 8" UNDERGROUND CITY SERVICE FROM POND STREET WILL BE PROVIDED BY SITE CONTRACTOR.

ALL NEW WORK WILL BE IN STRICT ACCORDANCE WITH MGL, 780 CMR, 9TH EDITION, CHAPTER 9 AND NFPA 13, & 14 CURRENT EDITION.

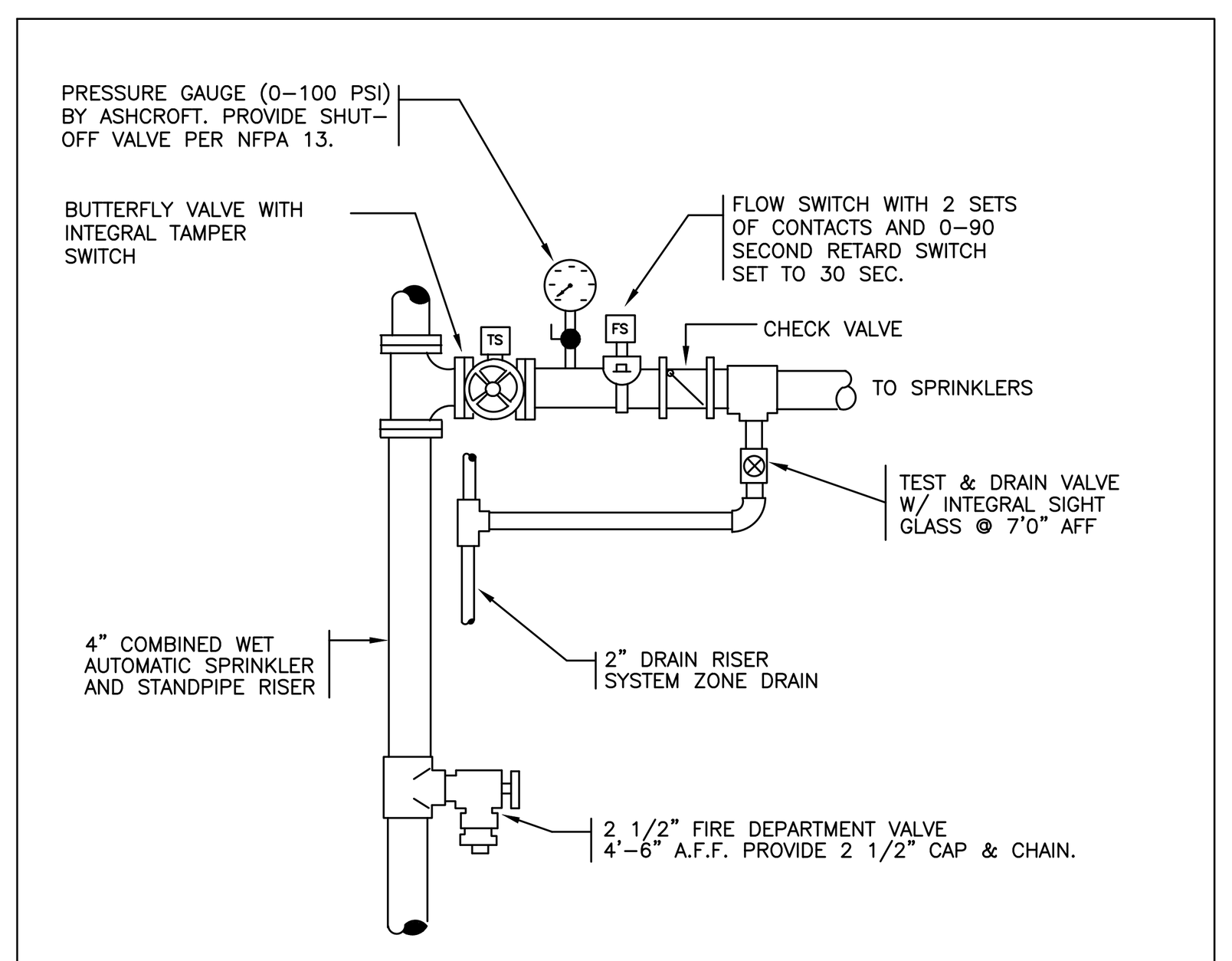

AUTOMATIC SPRINKLER & CLASS I STANDPIPE
WITH FLOOR CONTROL VALVE ASSEMBLY

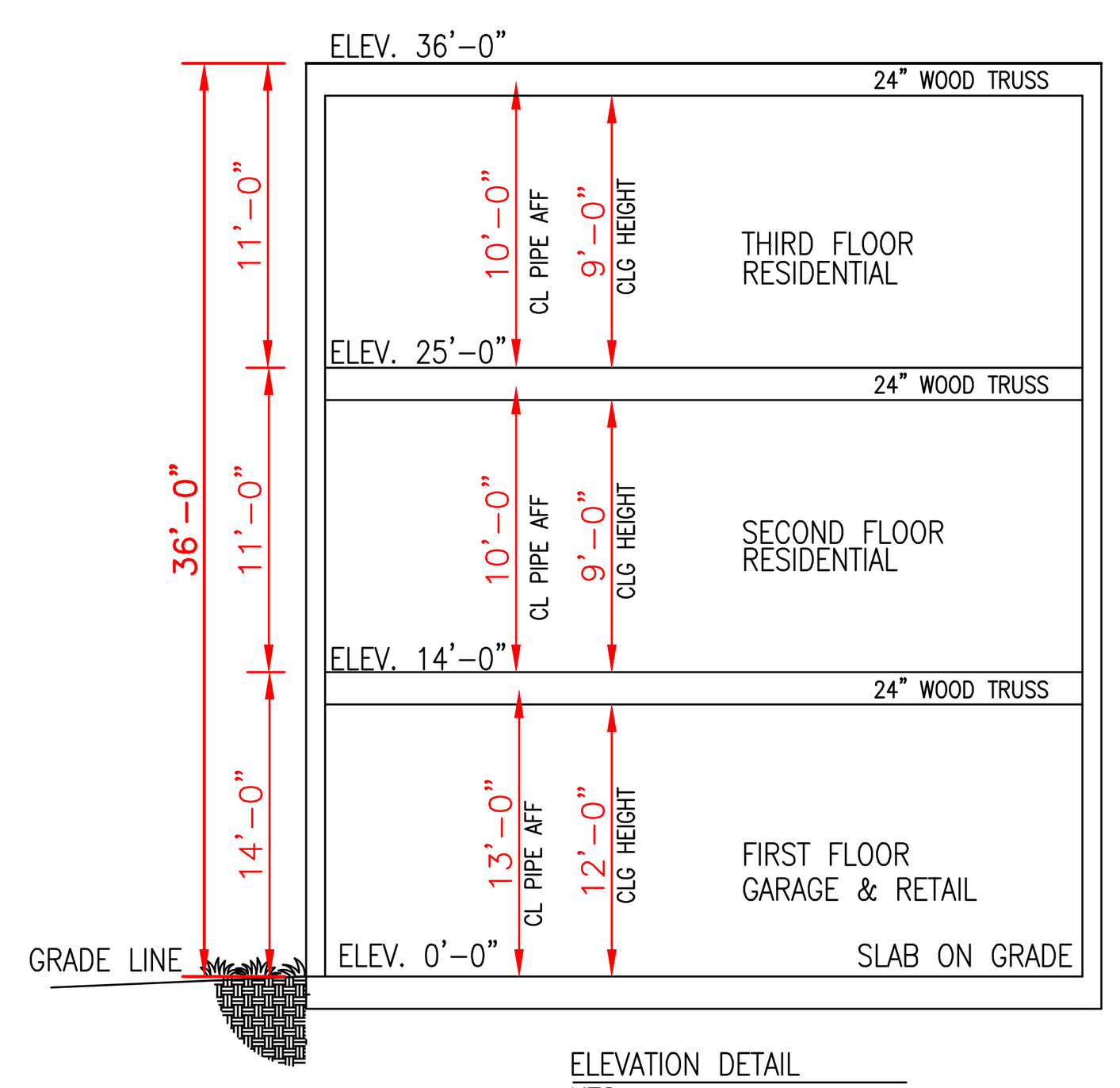

ELEVATION DETAIL
NTS.

This building is protected by a hydraulically designed sprinkler system		
Location Of Remote Area	GARAGE AREA	
Calculation Number	AREA 1	
Sprinklers In Remote Area	K Factor	Number
	11.2	29
Area Per Sprinkler	100	sq.ft.
Density	.40	gpm/sq.ft.
Designed Area Of Discharge	2500	sq.ft.
Water Flow At Riser	1283.78	gpm
Pressure At Riser	63.876	psi
Hose Allowance	500	gpm
Pressure Remaining At Riser	23.14	psi

This building is protected by a hydraulically designed sprinkler system		
Location Of Remote Area	RETAIL AREA	
Calculation Number	AREA #2	
Sprinklers In Remote Area	K Factor	Number
	5.6	13
Area Per Sprinkler	120	sq.ft.
Density	.20	gpm/sq.ft.
Designed Area Of Discharge	1132	sq.ft.
Water Flow At Riser	342.88	gpm
Pressure At Riser	74.416	psi
Hose Allowance	250	gpm
Pressure Remaining At Riser	40.416	psi

This building is protected by a hydraulically designed sprinkler system		
Location Of Remote Area	3rd FLOOR INTERSTITIAL	
Calculation Number	AREA #4	
Sprinklers In Remote Area	K Factor	Number
	5.6	10
Area Per Sprinkler	168	sq.ft.
Density	.10	gpm/sq.ft.
Designed Area Of Discharge	1400	sq.ft.
Water Flow At Riser	198.155	gpm
Pressure At Riser	86.316	psi
Hose Allowance	100	gpm
Pressure Remaining At Riser	31.516	psi

This building is protected by a hydraulically designed sprinkler system		
Location Of Remote Area	APARTMENT #308	
Calculation Number	AREA #5	
Sprinklers In Remote Area	K Factor	Number
	4.9	4
Area Per Sprinkler	256	sq.ft.
Density	.10	gpm/sq.ft.
Designed Area Of Discharge	640	sq.ft.
Water Flow At Riser	70.592	gpm
Pressure At Riser	47.458	psi
Hose Allowance	100	gpm
Pressure Remaining At Riser	71.126	psi

PARKING GARAGE DESIGN CRITERIA:

MIXED-USE BUILDING
OCCUPANCY: GARAGE MECHANICAL PARKING LIFTS
HAZARD CLASS: EXTRA HAZARD GROUP II
SPRINKLERS: VIKING VK536
TEMPERATURE: 155 DEGREE
K= FACTOR: 11.2
PIPE SIZE: ¾" IPS.

AREA PER SPRINKLER: 100 SQ/FT.
AREA OF APPLICATION: 2500 SQ/FT.
HOSE ALLOWANCE: 500 GPM
DENSITY: .40
NFPA 13 - 2016 EDITION, CHAPTER 5, SEC: 5.4.2
CHAPTER 11, SEC: 11.2.1.2.3, 11.2.3.1.1
MAXIMUM STORAGE HEIGHT TO TOP OF CAR IS 10'-6".
MAINTAIN 18" OF CLEARANCE FROM CAR TO SPRINKLER
PER SEC: 8.5.6.1.

RETAIL AREA DESIGN CRITERIA:

MIXED-USE BUILDING
OCCUPANCY: MERCANTILE
HAZARD CLASS: ORDINARY GROUP II
SPRINKLERS: GLOBE QR PENDENT
TEMPERATURE: 155 DEGREE
K= FACTOR: 5.6
PIPE SIZE: ½" IPS.

AREA PER SPRINKLER: 130 SQ/FT.
AREA OF APPLICATION: ENTIRE SQ/FT.
HOSE ALLOWANCE: 250 GPM
DENSITY: .20
NFPA 13 - 2016 EDITION, CHAPTER 5
SEC: 5.3.2

INTERSTITIAL SPACE DESIGN CRITERIA:

MIXED-USE BUILDING
OCCUPANCY: INTERSTITIAL SPACE
HAZARD CLASS: LIGHT HAZARD GROUP
SPRINKLERS: VIKING VK950
TEMPERATURE: 175 DEGREE
K= FACTOR: 5.6
PIPE SIZE: ½" IPS.

AREA PER SPRINKLER: 168 SQ/FT.
AREA OF APPLICATION: 1400 SQ/FT.
HOSE ALLOWANCE: 100 GPM
DENSITY: .10
NFPA 13 - 2016 EDITION, CHAPTER 5
SEC: 5.3.1

SPRINKLER DESIGN DATA:

GLOBE GL4906- RES. CONC SPRINKLER
16'-0 x 16'-0 = 256 Sq./Ft - 7.0 PSI @ 13 GPM
18'-0 x 18'-0 = 324 Sq./Ft. - 12.0 PSI @ 17 GPM

VIKING VK950 INTERSTITIAL SPRINKLER
14'-0 x 12'-0 = 168 Sq./Ft. x .10 = 16.8 GPM

VIKING VK536 STANDARD RESPONSE ELO PENDENT SPRINKLER.
10'-0 x 10'-0 = 100 Sq./Ft.

NOTE: THE WATER SUPPLY DATA USED WAS A CONSERVATIVE ESTIMATE FOR THE BUILDING PERMIT PROCESS ONLY. A NEW HYDRANT FLOW TEST WILL BE PERFORMED. NEW TIER II FIRE SPRINKLER DRAWINGS & CALCULATIONS WILL BE PROVIDED BY THIS SPRINKLER CONTRACTOR FOR THE INSTALLATION PERMIT OF THIS PROJECT.

RESIDENTIAL DESIGN CRITERIA:

MIXED-USE BUILDING
OCCUPANCY: RESIDENTIAL NFPA 13
HAZARD CLASS: LIGHT HAZARD
SPRINKLERS: GLOBE GL4906
TEMPERATURE: 155 DEGREE
K= FACTOR: 4.9
PIPE SIZE: ½" IPS.

AREA PER SPRINKLER: 256 SQ/FT.
AREA OF APPLICATION: 4- HEADS.
HOSE ALLOWANCE: 100 GPM
DENSITY: .10
NFPA 13 - 2013 EDITION, CHAPTER 5
SEC: 5.2

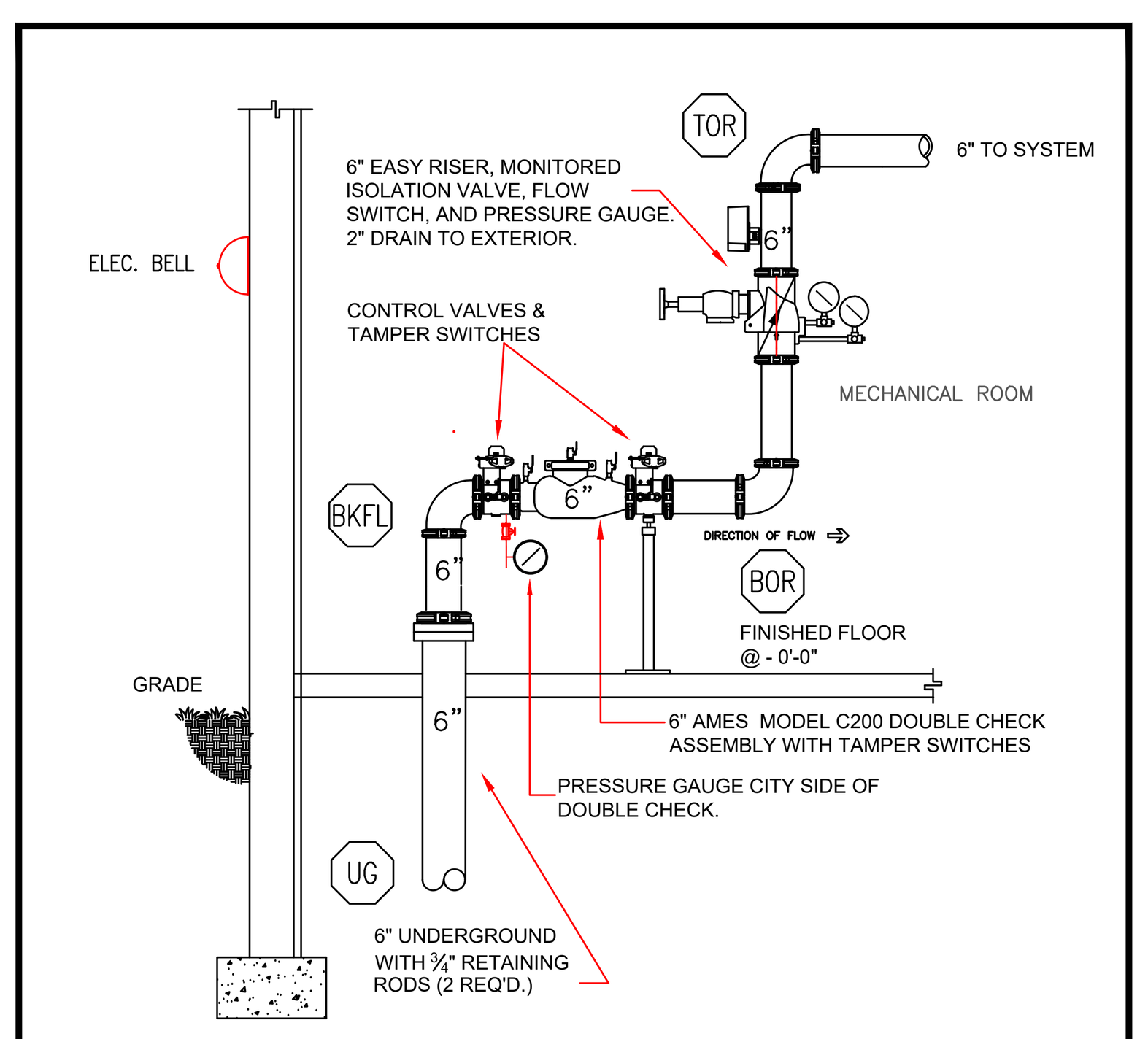

WET RISER & DOUBLE CHECK VALVE DETAIL
NOT TO SCALE

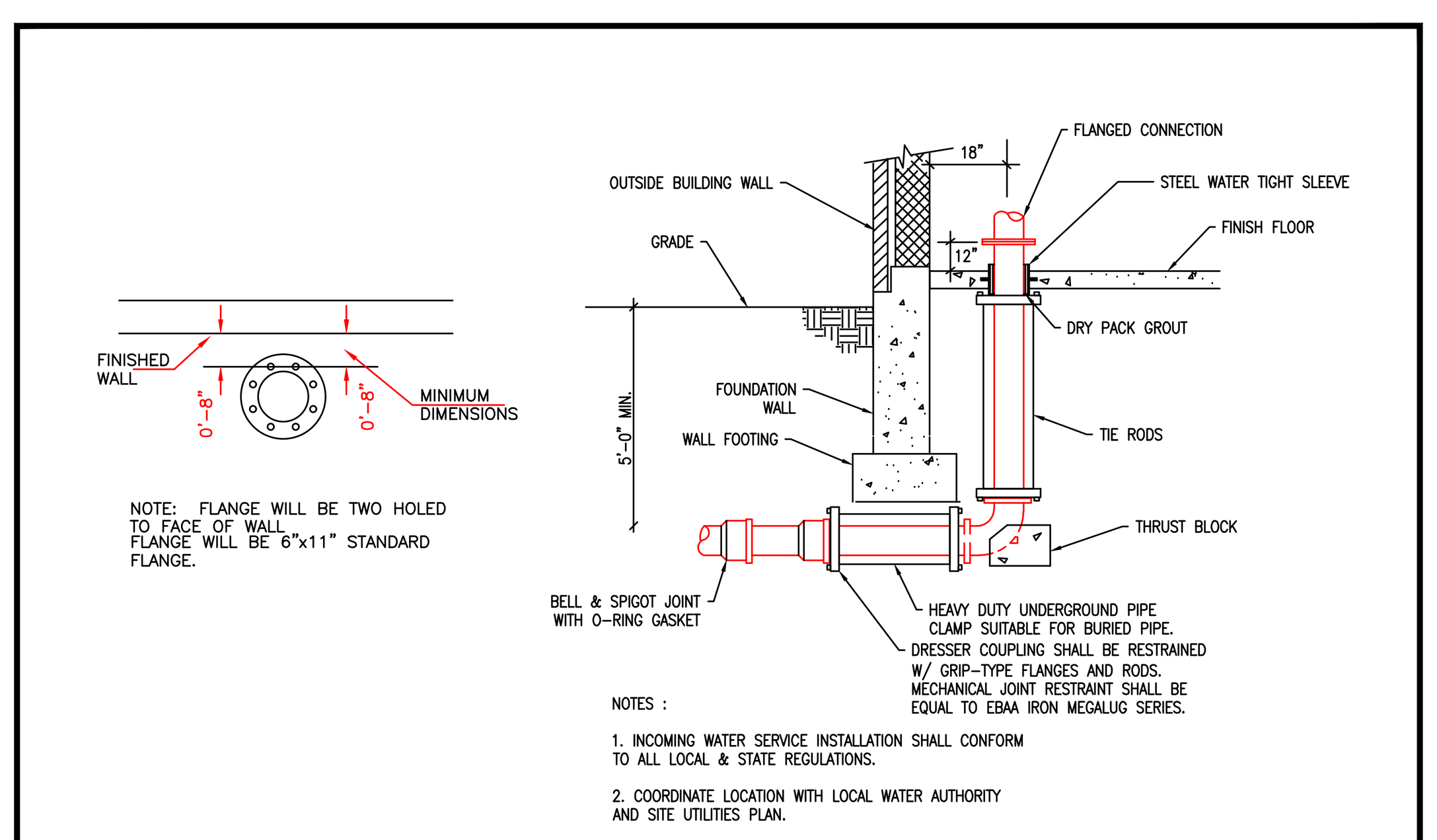

2 FIRE SERVICE ENTRANCE DETAIL
NOT TO SCALE

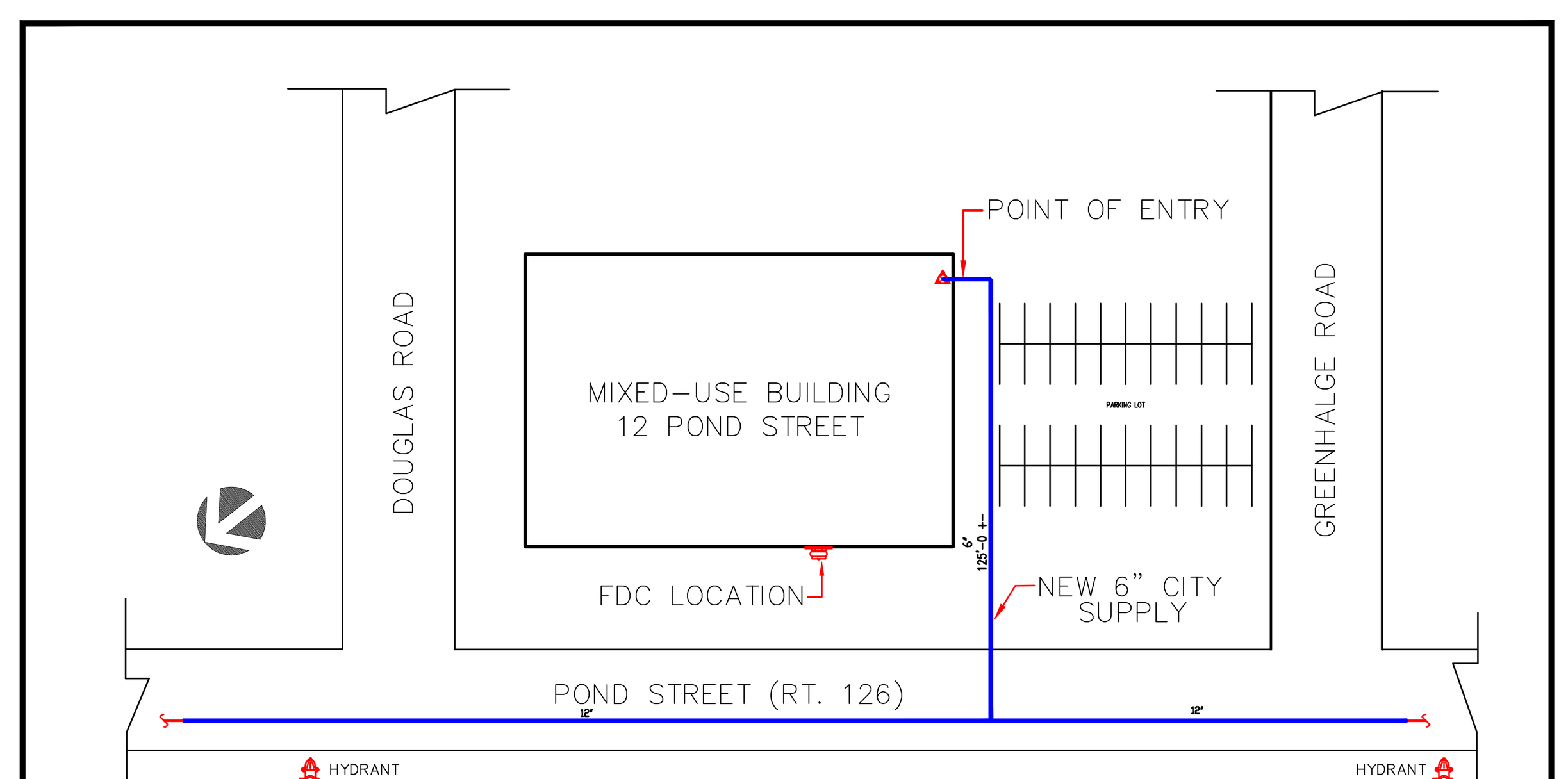

SITE PLAN, NTS.

WATER FLOW DATA

STATIC: 119#
RESIDUAL: 99#
FLOW: 1384 GPM
HYDRANT: "A"
BUTT SIZE: 2.5"
DATE: 04/28/20
TIME: NA
LOCATION: 19 Pond Street
BY: Ashland Water Dept

SYMBOLS

- NEW SPRINKLER PIPE (SOLID LINETYPE)
- PIPE UP/DOWN
- AMES COLT 200 DOUBLE CHECK
- WET PIPE RISER
- RISER UP / DN. LOCATION
- ZCA — ZONE / FLOOR CONTROL ASSEMBLY
- BASE — DENOTES HYDRAULIC REFERENCE POINT
- CHECK VALVE
- 11'–0" — DENOTES SPRINKLER PIPING CENTER LINE
- DENOTES HANGER POINT ON PIPE
- STANDPIPE ISOLATION VALVE
- 2 1/2" FIRE HOSE VALVE
- SPRINKLER MAIN FLUSH CAP

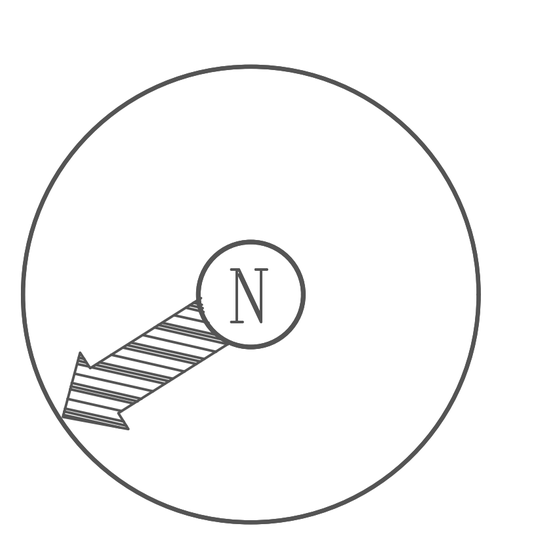

FRONT-LINE FIRE PROTECTION, LLC
325 North Main Street, Unit: C
Middleton, MA 01949
PH: 978-655-7002
FAX: 978-824-2557
www.frontlinefp.com
SC License: 210048

COMMONWEALTH OF MASSACHUSETTS LAWRENCE V. ROY FIRE PROTECTION No. 38913 REGISTERED PROFESSIONAL ENGINEER
PE STAMP

@ Front–Line Fire Protection 2020

This Engineered Fire Protection Plan, and all other associated reports, plans, specifications, computer files, field data, notes and other documents and instruments prepared by Front–Line Fire Protection as instruments of service shall remain the property of Front–Line Fire Protection. They may not be used or reproduced without expressed written concent of Front–Line Fire. Front–Line Fire shall retain all common law, statutory and other reserved rights, including the copyright thereto.

General Notes

1. All Pipe Locations are to be Field Measured Prior to Fabrication and Installation by Sprinkler Contractor.
2. All Dimensions Shown are Center to Center.
3. High Temperature Heads are to be Field Located Where Required.
4. All Pipes and Hangers are to be Installed per NFPA #13.
5. Hangers are to be U.L. Listed and F.M. Approved.
6. Owner will provide heat above 50° Fahrenheit to protect water filled pipe from freezing throughout building and excepts all responsibility their for.

Symbol	Description
⬡	Hydraulic Reference Points
[18 Bts]	Elev. Below Top of Steel
[8–6]	Elev. Above Finished Floor
+ (TOS 20–0)	Elev. of Top of Steel
(10–0)	Ceiling Height
⟋	Denotes Hanger Location
o	Rise up or down
red line	New Sprinkler Piping
blue dashed line	8"Draft Curtain on Truss

Number of Sprinklers — Total This Sheet 0 — Total This Job 639

Symbol	Description
●	232 (1/2",K=4.9) GLOBE GL4906 RES WH CONC PD 155°
⊗	215 (1/2",K=5.6) VIKING VK950 QR INTERSTITIAL BZ 175°
◐	22 (1/2",K=4.9) GLOBE GL4910 RES WH PENDENT 175°
⦿	58 (1/2",K=5.6) GLOBE GL5601 QR CH RECESSED PENDENT 155°
○	83 (3/4",K=11.2) VIKING VK536 SR CH RECESSED PENDENT 155°
◎	01 (1",K=5.6) GLOBE GL5637 DRY QR CH RECESSED PENDENT 155°
⦿	28 GLOBE INTERSTITIAL & RESIDENTIAL PENDENT (ABOVE & BELOW)

Drawing Title: FIRE SPRINKLER NOTES & DETAILS	Revisions:	Date:
Contract No: .	FLOW TEST & STANDPIPE	05/05/20
Drawn By: J. LARKIN	CALCULATIONS	05/05/20
Scale: 3/16"= 1'–0"		
Date: 04/10/20		
Approval By: AHJ		

Job:
MIXED–USE BUILDING
12 POND STREET
ASHLAND, MA 01721

Contractor:
LEGACY CONSTRUCTION
11 PLACID ROAD
NEWTON, MA 02459

SHEET 1 OF 4
FP–1

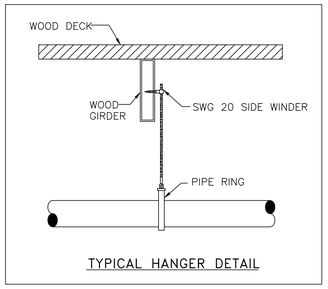

TYPICAL HANGER DETAIL

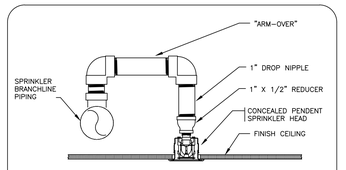

CONCEALED SPRINKLER

N.T.S.

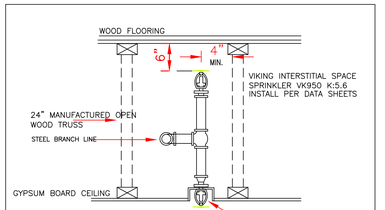

SPRINKLER ABOVE & BELOW CEILING

SCALE: NONE

NOTE:
4" STORZ FIRE DEPT. CONNECTION @ 30"AFF.
PROVIDE BALL CHECK & DRAIN TO EXTERIOR.

BUILDING FRONT
POND STREET

COMMERCIAL - 1
1,132 GROSS SQ.FT.

COMMERCIAL - 2
863 GROSS SQ.FT.

COMMERCIAL - 3
1,172 GROSS SQ.FT.

COMMERCIAL - 4
1,203 GROSS SQ.FT.

Area 2 – 1132 Ft²

Area 3 – 1155 Ft²

MAIN LOBBY

ELEVATOR MACHINE ROOM

VAN ACCESSIBLE

STORAGE

STAIR #1

STAIR #2

ZONE CONTROL RETAIL SPACE #1 & #2

4" STANDPIPE UP.

ZONE CONTROL RETAIL SPACE #3 & #4

PROVIDE ACCESS PANEL IF NECESSARY.

4" STANDPIPE ISOLATION

FDC CHECK VALVE

4" STANDPIPE ISOLATION VALVE.

GARAGE
(2) H.C. PARKING
(15) STACKED PARKING (30)
32 PARKING SPACE

INTERSTITIAL SPACE SPRINKLER (TYP.)

ZONE CONTROL GARAGE

FIRE SPRINKLER ROOM

STACKED PARKING

Area 1 – 2520 Ft²

BIKE ROOM

ELECTRICAL ROOM

DRY PENDENT SPRK.

FLOOR @ 0'-0"

NOTE:
SEE VALVE STATION DETAIL FP-1.

NOTE:
GENERAL CONTRACTOR WILL PROVIDE DRAFT CURTAINS AS SHOWN ON SIDE OF A TRUSS 8" DOWN FROM UNDERSIDE OF DECK.

Hydraulic Calculation Data
Design Area Number: 2 Design Area Location: 1st Floor Retail Area Hazard/Occupancy: Ordinary Group 2 Design Density: .20 Design Area: 1132 Number of Sprinklers in Design Area: 13
System Flow: 592.878 System Pressure: 74.416 Hose Allowance (Included): 250

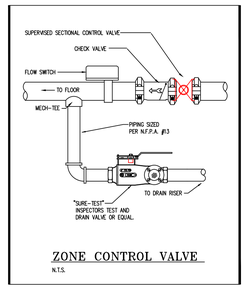

ZONE CONTROL VALVE

N.T.S.

Hydraulic Calculation Data
Design Area Number: 1 Design Area Location: 1st Floor Garage Area Hazard/Occupancy: Extra Hazard Group 2 Design Density: .40 Design Area: 2,500 Number of Sprinklers in Design Area: 29
System Flow: 1783.777 System Pressure: 63.876 Hose Allowance (Included): 500

1ST FLOOR SPRINKLER PLAN

3/16" = 1'-0"

FRONT-LINE FIRE PROTECTION, LLC
325 North Main Street, Unit: C
Middleton, MA 01949
PH: 978-655-7002
FAX: 978-824-2557
www.frontlinefp.com
SC License: 210048

PE STAMP

© Front-Line Fire Protection 2020

This Engineered Fire Protection Plan, and all other associated reports, plans, specifications, computer files, field data, notes and other documents and instruments prepared by Front-Line Fire Protection as instruments of service shall remain the property of Front-Line Fire Protection. They may not be used or reproduced without expressed written concent of Front-Line Fire. Front-Line Fire shall retain all common law, statutory and other reserved rights, including the copyright thereto.

General Notes

1. All Pipe Locations are to be Field Measured Prior to Fabrication and Installation by Sprinkler Contractor.
2. All Dimensions Shown are Center to Center.
3. High Temperature Heads are to be Field Located Where Required.
4. All Pipes and Hangers are to be Installed per NFPA #13.
5. Hangers are to be U.L. Listed and F.M. Approved.
6. Owner will provide heat above 50° Fahrenheit to protect water filled pipe from freezing throughout building and excepts all responsibility their for.

Symbols

Symbol	Description
○	Hydraulic Reference Points
[18 sq]	Elev. Below Top of Steel
[8-6]	Elev. Above Finished Floor
+ (TOS 20-0)	Elev. of Top of Steel
⌓	Ceiling Height
	Denotes Hanger Location
○	Rise up or down
	New Sprinkler Piping
	6"Draft Curtain on Truss

Number of Sprinklers

Total This Sheet 215	Total This Job 639	
Symbol		Description
✪	83	(3/4",K=11.2) VIKING VK536 SR CH RECESSED PENDENT 155°
⊗	71	(1/2",K=5.6) VIKING VK950 QR INTERSTITIAL BZ 175°
⊙	58	(1/2",K=5.6) GLOBE GL5601 QR CH RECESSED PENDENT 155°
◎	01	(1",K=5.6) GLOBE GL5637 DRY QR CH RECESSED PENDENT 155°
●	28	GLOBE INTERSTITIAL & RESIDENTIAL PENDENT (ABOVE & BELOW)

Drawing Title:	1ST FLOOR GARAGE & RETAIL SPRINKLER
Contract No:	.
Drawn By:	J. LARKIN
Scale:	3/16"= 1'-0"
Date:	04/10/20
Approval By:	AHJ

Revisions:	Date:
FLOW TEST & STANDPIPE	05/05/20
CALCULATIONS	05/05/20

Job:
MIXED-USE BUILDING
12 POND STREET
ASHLAND, MA 01721

Contractor:
LEGACY CONSTRUCTION
11 PLACID ROAD
NEWTON, MA 02459

SHEET 2 OF 4
FP-2

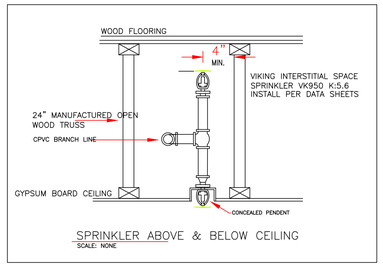

SPRINKLER ABOVE & BELOW CEILING

SCALE: NONE

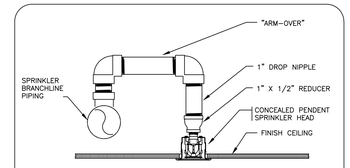

CONCEALED SPRINKLER

N.T.S.

BUILDING FRONT
POND STREET

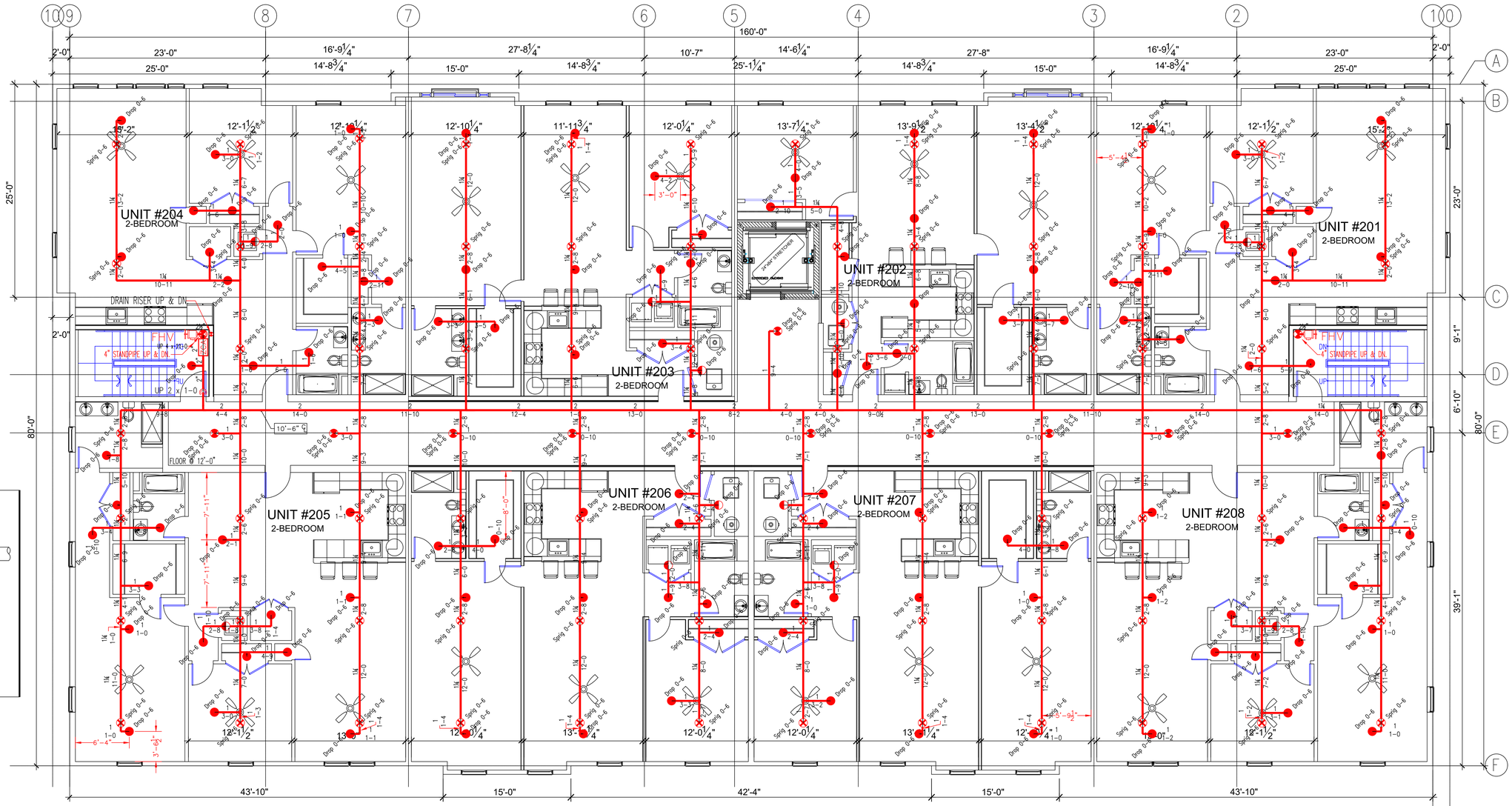

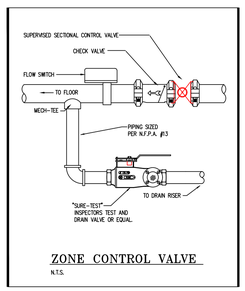

ZONE CONTROL VALVE

N.T.S.

2ND FLOOR SPRINKLER PLAN

3/16" = 1'-0"

FRONT-LINE FIRE PROTECTION, LLC
325 North Main Street, Unit: C
Middleton, MA 01949
PH: 978-655-7002
FAX: 978-624-2557
www.frontlinefp.com
SC License: 210048

PE STAMP

© Front-Line Fire Protection 2020

This Engineered Fire Protection Plan, and all other associated reports, plans, specifications, computer files, field data, notes and other documents and instruments prepared by Front-Line Fire Protection as instruments of service shall remain the property of Front-Line Fire Protection. They may not be used or reproduced without expressed written concent of Front-Line Fire. Front-Line Fire shall retain all common law, statutory and other reserved rights, including the copyright thereto.

General Notes

1. All Pipe Locations are to be Field Measured Prior to Fabrication and Installation by Sprinkler Contractor.
2. All Dimensions Shown are Center to Center.
3. High Temperature Heads are to be Field Located Where Required.
4. All Pipes and Hangers are to be Installed per NFPA #13.
5. Hangers are to be U.L. Listed and F.M. Approved.
6. Owner will provide heat above 50° Fahrenheit to protect water filled pipe from freezing throughout building and excepts all responsibility their for.

Symbols

Symbol	Description
⬡	Hydraulic Reference Points
[18 89]	Elev. Below Top of Steel
[8-4]	Elev. Above Finished Floor
+ (TOS 20-0)	Elev. of Top of Steel
⟺	Ceiling Height
⟋	Denotes Hanger Location
○	Rise up or down
———	New Sprinkler Piping
— — —	8"Draft Curtain on Truss

Number of Sprinklers

Total This Sheet 211 Total This Job 639

Symbol	Description
●	117 (1/2"K=4.9) GLOBE GL4906 RES WH CONC PD 155°
⊗	72 (1/2"K=5.6) VIKING VK950 QR INTERSTITIAL BZ 175°
◐	11 (1/2"K=4.9) GLOBE GL4910 RES WH PENDENT 175°
◉	11 GLOBE INTERSTITIAL & RESIDENTIAL PENDENT (ABOVE & BELOW)

Drawing Title: 2ND FLOOR SPRINKLER PLAN

Contract No: .

Drawn By: J. LARKIN

Scale: 3/16"= 1'-0"

Date: 04/10/20

Approval By: AHJ

Revisions:	Date:
FLOW TEST & STANDPIPE	05/05/20
CALCULATIONS	05/05/20

Job:
MIXED-USE BUILDING
12 POND STREET
ASHLAND, MA 01721

Contractor:
LEGACY CONSTRUCTION
11 PLACID ROAD
NEWTON, MA 02459

SHEET 3 OF 4
FP-3

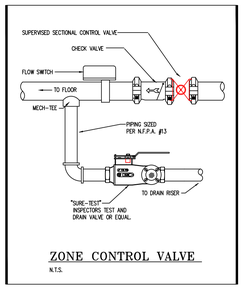

ZONE CONTROL VALVE

N.T.S.

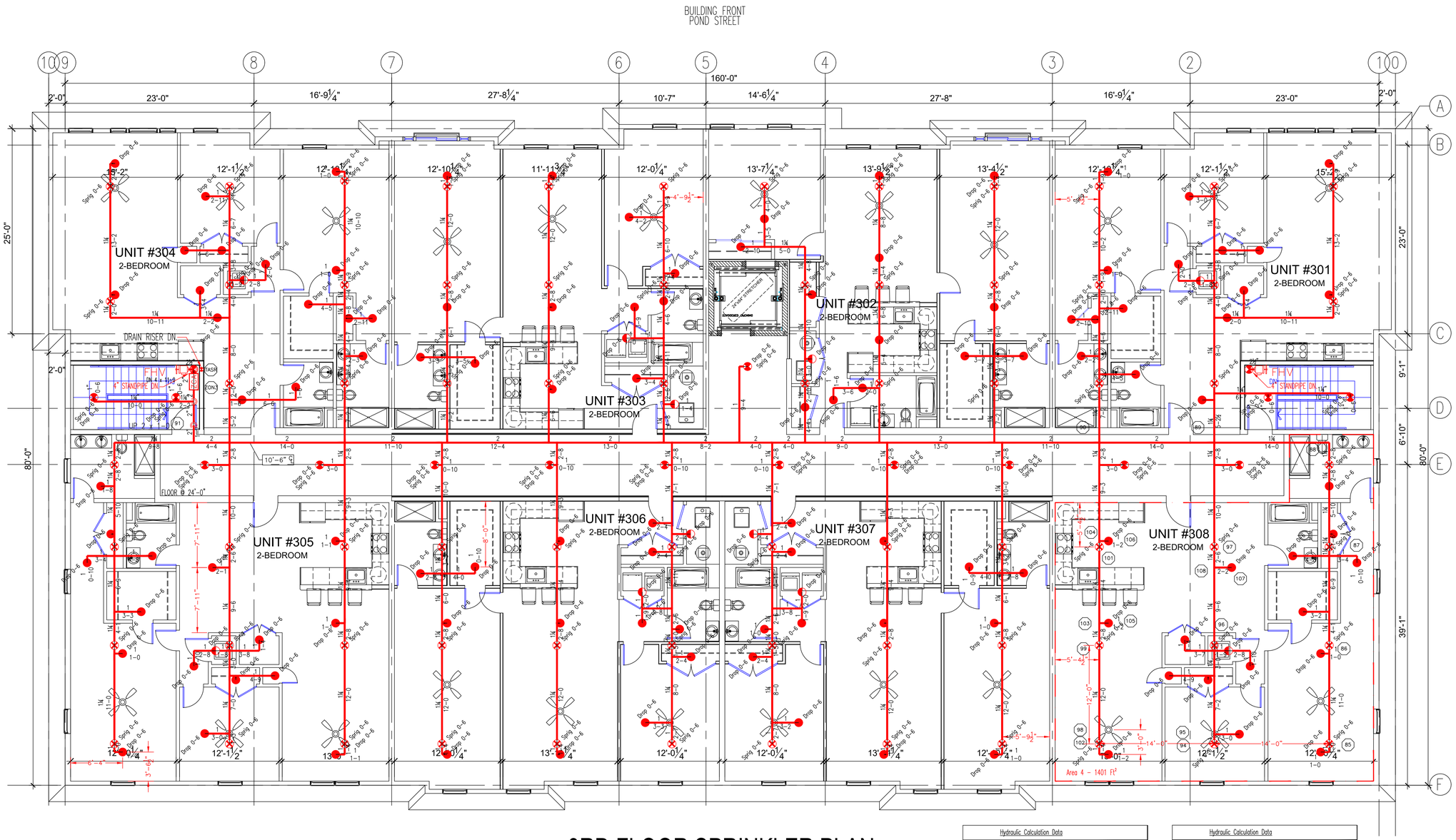

3RD FLOOR SPRINKLER PLAN

3/16" = 1'-0"

Hydraulic Calculation Data
Design Area Number: 5 Design Area Location: 3rd Floor Apartment #308 Hazard/Occupancy: Light Hazard (NFPA 13) Design Density: .10 Design Area: 640 Number of Sprinklers in Design Area: 4
System Flow: 170.592 System Pressure: 47.458 Hose Allowance (Included): 100

Hydraulic Calculation Data
Design Area Number: 4 Design Area Location: 3rd Floor Interstitial Space Hazard/Occupancy: Light Hazard Group Design Density: .10 Design Area: 1401 Number of Sprinklers in Design Area: 10
System Flow: 298.155 System Pressure: 86.316 Hose Allowance (Included): 100

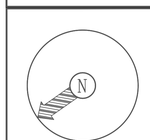

FRONT-LINE FIRE PROTECTION, LLC
325 North Main Street, Unit: C
Middleton, MA 01949
PH: 978-655-7002
FAX: 978-824-2557
www.frontlinefp.com
SC License: 210048



PE STAMP

@ Front-Line Fire Protection 2020

This Engineered Fire Protection Plan, and all other associated reports, plans, specifications, computer files, field data, notes and other documents and instruments prepared by Front-Line Fire Protection as instruments of service shall remain the property of Front-Line Fire Protection. They may not be used or reproduced without expressed written concent of Front-Line Fire. Front-Line Fire shall retain all common law, statutory and other reserved rights, including the copyright thereto.

General Notes

1. All Pipe Locations are to be Field Measured Prior to Fabrication and Installation by Sprinkler Contractor.
2. All Dimensions Shown are Center to Center.
3. High Temperature Heads are to be Field Located Where Required.
4. All Pipes and Hangers are to be Installed per NFPA #13.
5. Hangers are to be U.L. Listed and F.M. Approved.
6. Owner will provide heat above 50° Fahrenheit to protect water filled pipe from freezing throughout building and excepts all responsibility their for.

Symbols

Symbol	Description
○	Hydraulic Reference Points
[18 Bhp]	Elev. Below Top of Steel
[8-6]	Elev. Above Finished Floor
+ (TOS 20-0)	Elev. of Top of Steel
10-0	Ceiling Height
	Denotes Hanger Location
○	Rise up or down
	New Sprinkler Piping
	8"Draft Curtain on Truss

Number of Sprinklers

Total This Sheet 213 | Total This Job 639

Symbol	Description
●	115 (1/2",K=4.9) GLOBE GL4906 RES WH CONC PD 155°
⊗	72 (1/2",K=5.6) VIKING VK950 QR INTERSTITIAL BZ 175°
◐	11 (1/2",K=4.9) GLOBE GL4910 RES WH PENDENT 175°
⊕	15 GLOBE INTERSTITIAL & RESIDENTIAL PENDENT (ABOVE & BELOW)

Drawing Title: 3RD FLOOR SPRINKLER PLAN

Contract No: .

Drawn By: J. LARKIN

Scale: 3/16"= 1'-0"

Date: 04/10/20

Approval By: AHJ

Revisions:	Date:
FLOW TEST & STANDPIPE	05/05/20
CALCULATIONS	05/05/20

Job:
MIXED-USE BUILDING
12 POND STREET
ASHLAND, MA 01721

Contractor:
LEGACY CONSTRUCTION
11 PLACID ROAD
NEWTON, MA 02459

SHEET 4 OF 4
FP-4

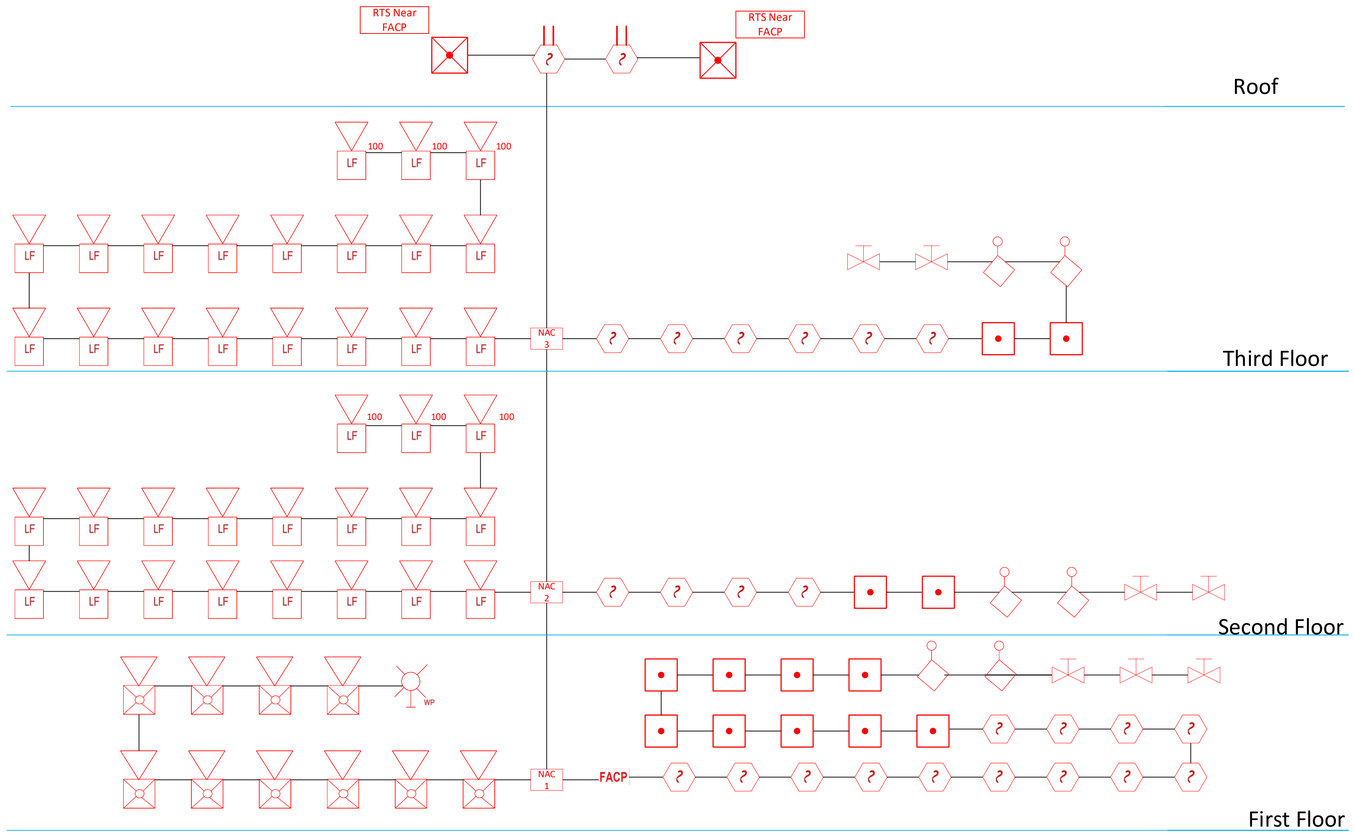



Notes:
1. These plans do not include provisions for an in building emergency radio communications system (BDA), however if it is determined by the AHJ after a building survey by a qualified individual or company that such system is required this fire alarm system control unit is capable of supervising said system provided by others.
2. If required by the AHJ this fire alarm system control unit is capable of supervising the CO ventilating system provided by others in the building parking garage.
3. The Supervising Station shall be a UL Listed Central Station

Input / Output Matrix

	Control Unit Annunciation									Notification								Required Fire Safety Control										Supplementary					
System Inputs	Actuate Common Alarm Signal Indicator	Actuate Audible Alarm Signal	Actuate Common Supervisory Signal Indicator	Actuate Audible Supervisory Signal	Actuate common trouble signal indicator	Actuate audible common trouble signal	Actuate zone alarm indicator			Actuate all A/V notification appliances	Display Change of status	Transmit fire alarm signal to central station	Transmit supervisory signal to central station	Transmit trouble signal to central station				Release Magnetically held doors	Recall elevators to primary floor	Recall Elevators to secondary floor	Close smoke dampers in rated openings	Activate smoke exhaust	Unlock exit doors					Actuate exterior strobe at FD Access Point					
All Manual Fire Alarm Boxes	x	x								x	x	x						x	x									x					
All Smoke Detectors	x	x								x	x	x						x	x									x					
All Heat Detectors																																	
Sprinkler Water Flow	x	x								x	x	x						x	x									x					
All CO Detectors																																	
Fixed Suppression Discharge																																	
Elevator Lobby Smoke Detector	x									x	x	x						x		x								x					
Elevator Mach. Rm. Smoke Det.	x	x								x	x	x						x	x									x					
Elevator Primary Level Lobby S.D.										x	x	x						x		x								x					
All Duct Smoke Detectors			x	x							x		x																				
Sprinkler Supervisory Switches			x	x							x		x																				
Fire Pump Running																																	
Fire Pump Power Failure																																	
Fire Alarm Power Failure					x						x			x																			
Fire Alarm Low Battery					x						x			x																			
Fire Alarm Open Circuit					x						x			x																			
Fire Alarm Ground Fault					x						x			x																			
Notification Appliance Short					x						x			x																			
Notification Appliance Open					x						x			x																			

12 Pond Street
Ashland, MA

Wayne Alarm Systems
424 Essex Street
Lynn, MA 01902

Systems Contractor
Ralph W. Sevinor
Lic. # 1111

WARNING! WAYNE ALARM (798) 595-0000

COMMONWEALTH OF MASSACHUSETTS WAYNE ALARM SYSTEMS, INC. LICENSED FIRE ALARM CONTRACTOR

NFPA MEMBER INTERNATIONAL CODE COUNCIL 2016-2017

FA-1

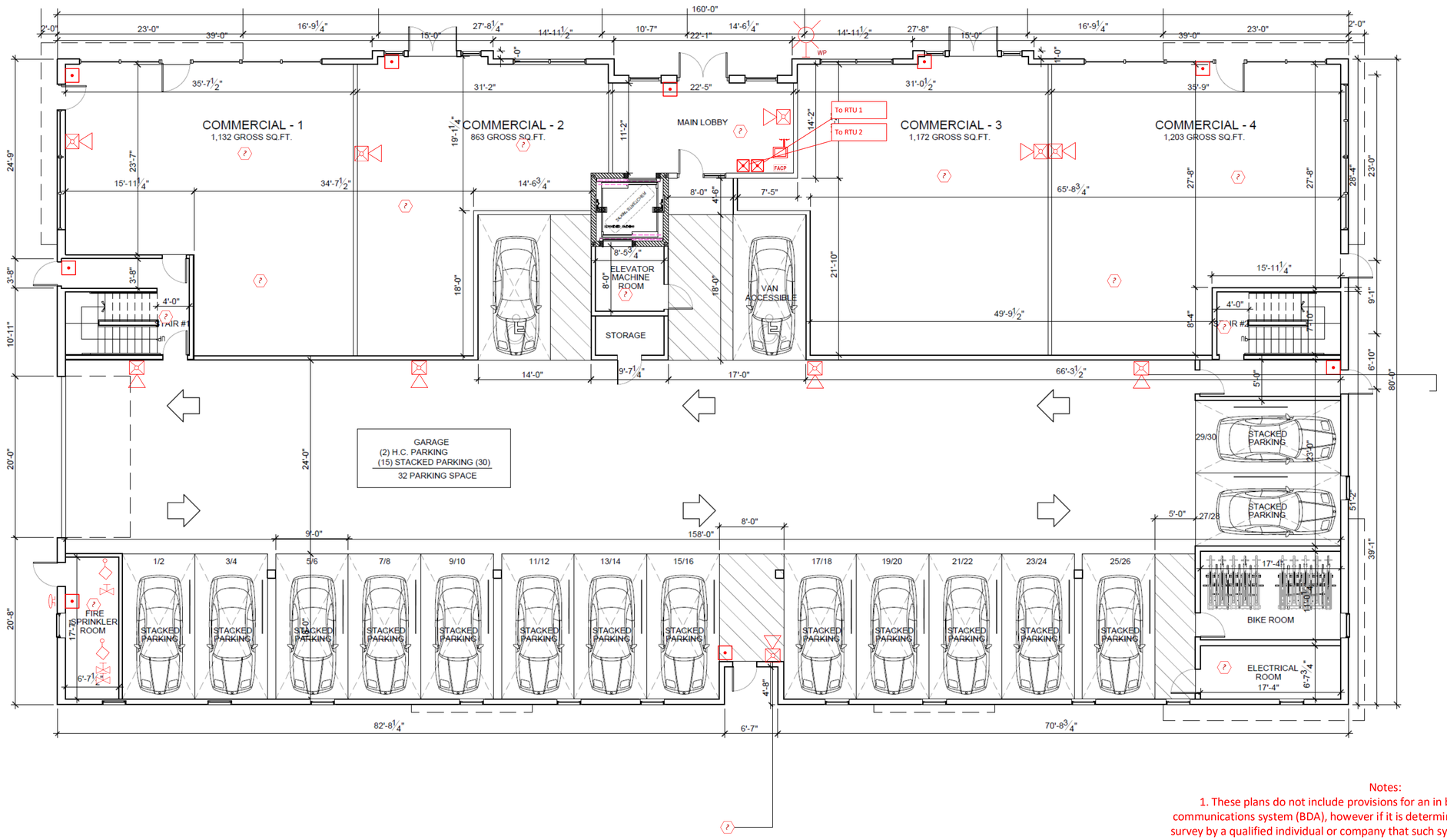

Notes:
1. These plans do not include provisions for an in building emergency radio communications system (BDA), however if it is determined by the AHJ after a building survey by a qualified individual or company that such system is required this fire alarm system control unit is capable of supervising said system provided by others.
2. If required by the AHJ this fire alarm system control unit is capable of supervising the CO ventilating system provided by others in the building parking garage.

Fire Alarm		
Symbol	Count	Description
?	13	Photo Electric Smoke Detector.146
•	9	Manual Pull Station.147
	10	Horn / Strobe.166
	2	Remote Test Switch
FACP	1	Fire Alarm Control Panel.145
	1	Radio Communicator.172
	2	Flow Switch.158
	3	Tamper Switch.157
	1	Electric Bell.164
	1	Strobe Weather Proof

12 Pond Street
Ashland, MA

Wayne Alarm Systems
424 Essex Street
Lynn, MA 01902

Systems Contractor
Ralph W. Sevinor
Lic. # 1111

WARNING! WAYNE ALARM (800) 595-10000

WAYNE ALARM SYSTEMS, INC. LIC #11111 COMMONWEALTH OF MASSACHUSETTS FIRE ALARM CONTRACTOR

NFPA MEMBER

ICC INTERNATIONAL CODE COUNCIL 2016-2017

FA-2

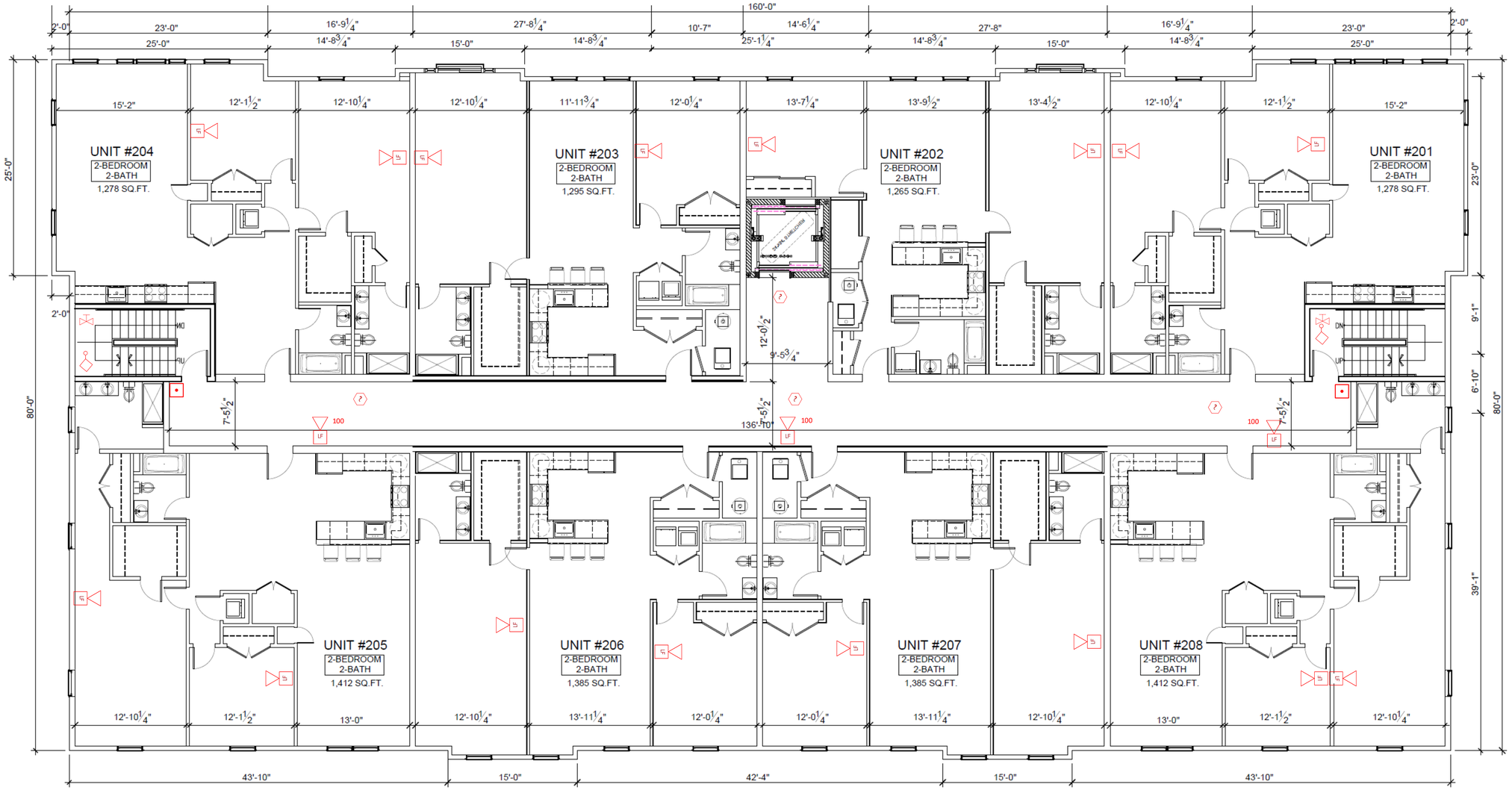

Fire Alarm		
Symbol	Count	Description
	4	Photo Electric Smoke Detector.146
	19	Low Frequency Sounder
	2	Manual Pull Station.147
	2	Tamper Switch.157
	2	Flow Switch.158

12 Pond Street
Ashland, MA

Wayne Alarm Systems
424 Essex Street
Lynn, MA 01902

Systems Contractor
Ralph W. Sevinor
Lic. # 1111

WAYNE ALARM
(781) 595-0000

NFPA MEMBER
INTERNATIONAL CODE COUNCIL 2016-2017

FA-3

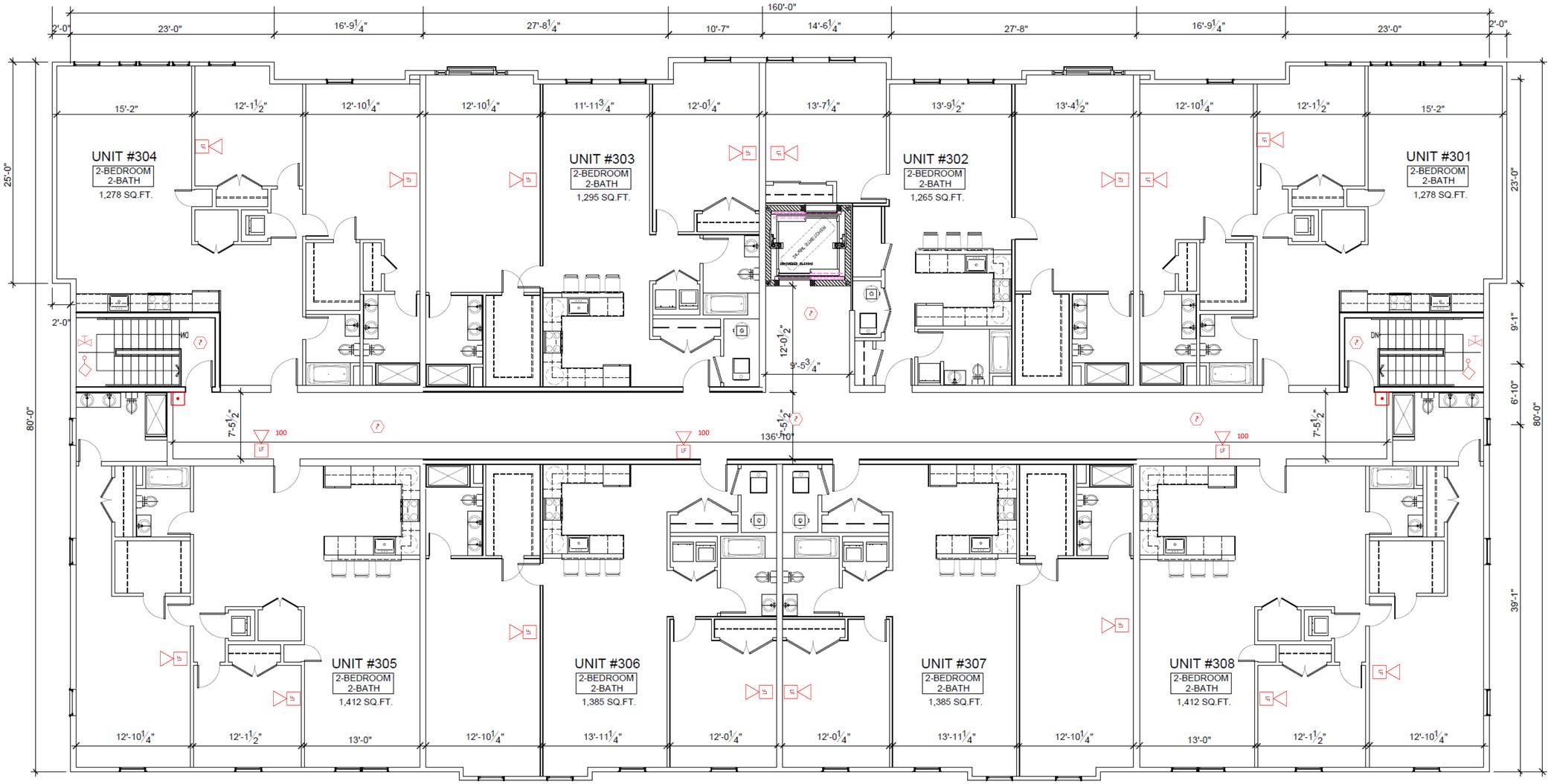

Fire Alarm		
Symbol	Count	Description
	6	Photo Electric Smoke Detector.146
	19	Low Frequency Sounder
	2	Manual Pull Station.147
	2	Tamper Switch.157
	2	Flow Switch.158

12 Pond Street
Ashland, MA

Wayne Alarm Systems
424 Essex Street
Lynn, MA 01902

Systems Contractor
Ralph W. Sevinor
Lic. # 1111

WARNING! WAYNE ALARM (781) 595-0000

COMMONWEALTH OF MASSACHUSETTS WAYNE ALARM SYSTEMS, INC. LIC. #1111 LICENSED FIRE ALARM CONTRACTOR

NFPA MEMBER INTERNATIONAL CODE COUNCIL 2016-2017

FA-4

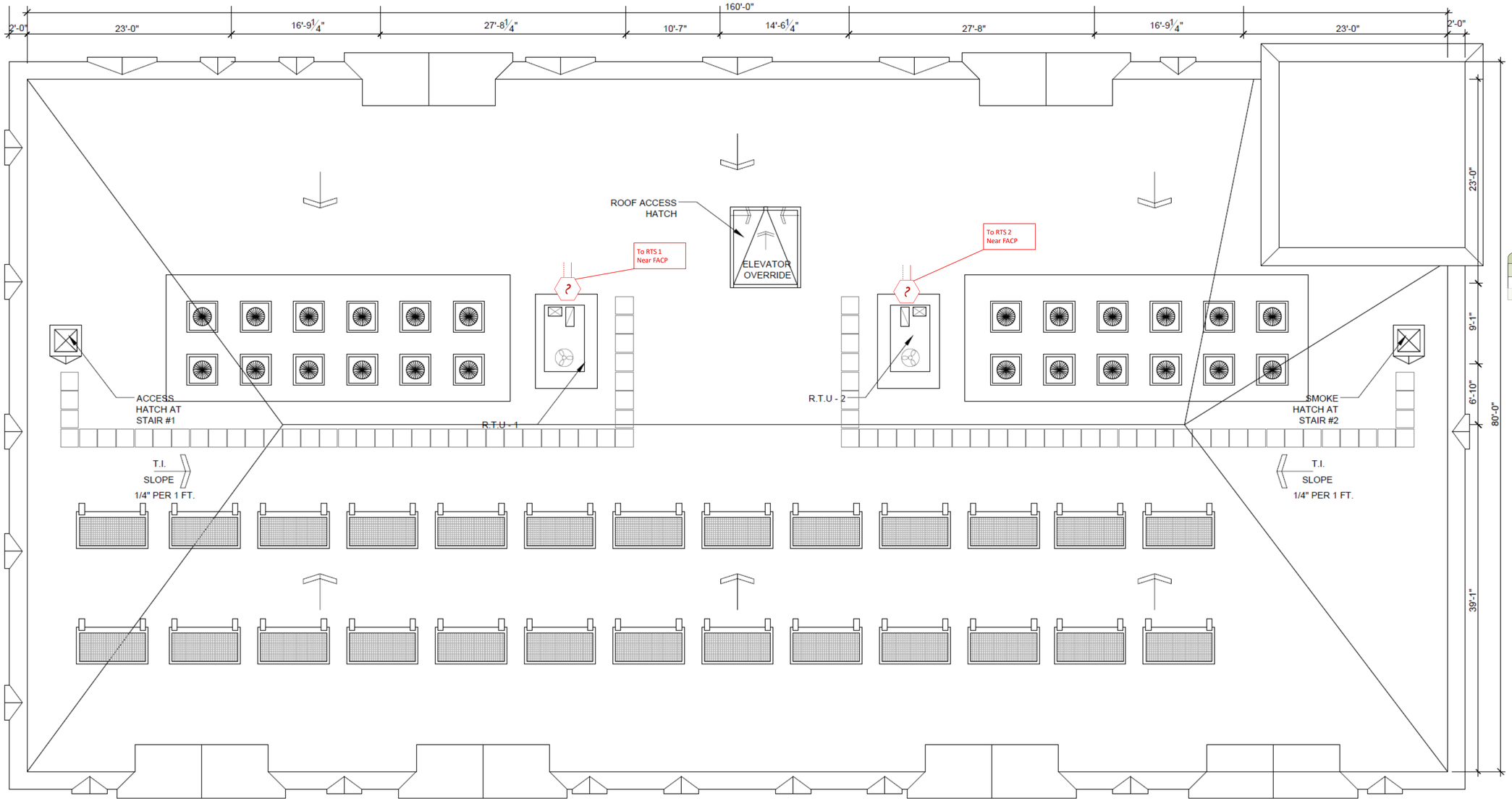

Fire Alarm		
Symbol	Count	Description
	2	Duct Smoke Detector

12 Pond Street
Ashland, MA

Wayne Alarm Systems
424 Essex Street
Lynn, MA 01902

Systems Contractor
Ralph W. Sevinor
Lic. # 1111

WAYNE ALARM SYSTEMS

NFPA MEMBER

ICC INTERNATIONAL CODE COUNCIL 2016-2017

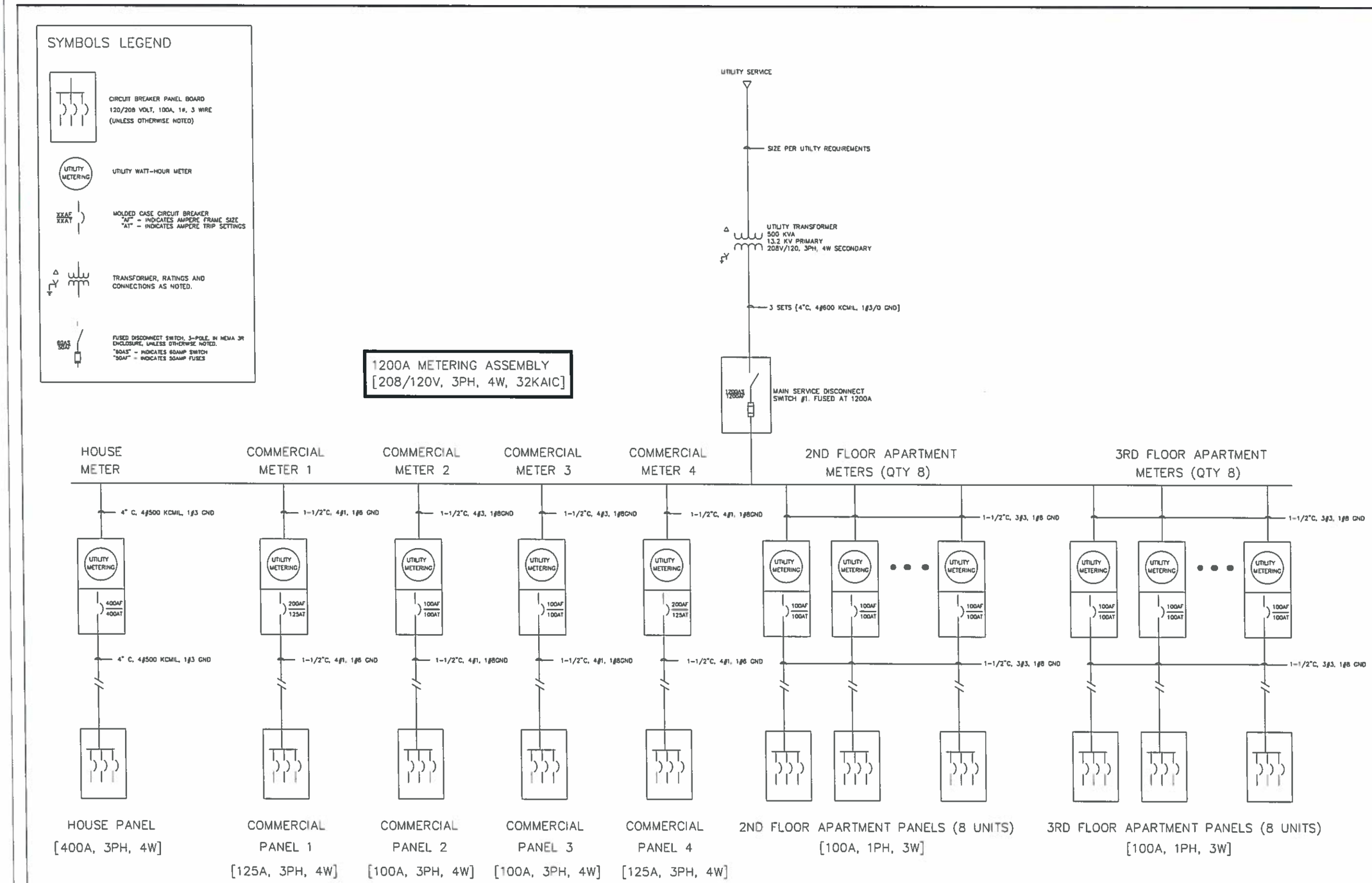

NOTE: ALL PANELS SHALL HAVE A 22 KAIC RATING

REVISIONS

COMMONWEALTH OF MASSACHUSETTS
WILLIAM E. EKSTROM
ELECTRICAL
No. 47374
REGISTERED PROFESSIONAL ENGINEER

5-28-20

ENGINEERS STAMP

ELECTRICAL ENGINEER
WILLIAM EKSTROM, PE
ENGINEERING LICENSE #47374
LYNN, MA

OWNER
LEGACY BUILDERS
11 PLACID ROAD
NEWTON, MA

PROJECT TITLE & ADDRESS
MULTI-FAMILY RESIDENCE
12 POND STREET
ASHLAND, MA

DRAWING DESCRIPTION
ELECTRICAL ONELINE DIAGRAM
-
-

PROJECT #	EE20-003	SHEET	E-0
DATE	03-05-20		
SCALE	NTS		

SYMBOLS LEGEND

- 100A, 120/208 VOLT, 1 PHASE, 3 WIRE RECESSED POWER PANEL (UNLESS OTHERWISE INDICATED)
- (S) SMOKE ALARM, MULTI-STATION TYPE, 120V POWER CONNECT TO POWER PANEL IN APPARTMENT
- (C) CARBON MONOXIDE DETECTOR, MULTI-STATION TYPE, 120V POWER CONNECT TO POWER PANEL IN APPARTMENT
- (SC) COMBINATION SMOKE DETECTOR AND CARBON MONOXIDE DETECTOR MULTI-STATION TYPE, 120V POWER CONNECT TO POWER PANEL IN APPARTMENT
- EMERGENCY LIGHTING BATTERY UNIT WITH TWO LAMP HEADS [CONECT TO NORMAL LIGHTING CIRCUIT IN IMMEDIATE AREA]
- EXIT SIGN, WALL MOUNTED. PROVIDE UNIT WITH BATTERY BACKUP.
- EXIT SIGN, CEILING MOUNTED, SINGLE FACE, ARROW INDICATES. DIRECTION OF EGRESS.
- EXIT SIGN, CEILING MOUNTED, DOUBLE FACE, ARROW INDICATES DIRECTION OF EGRESS.

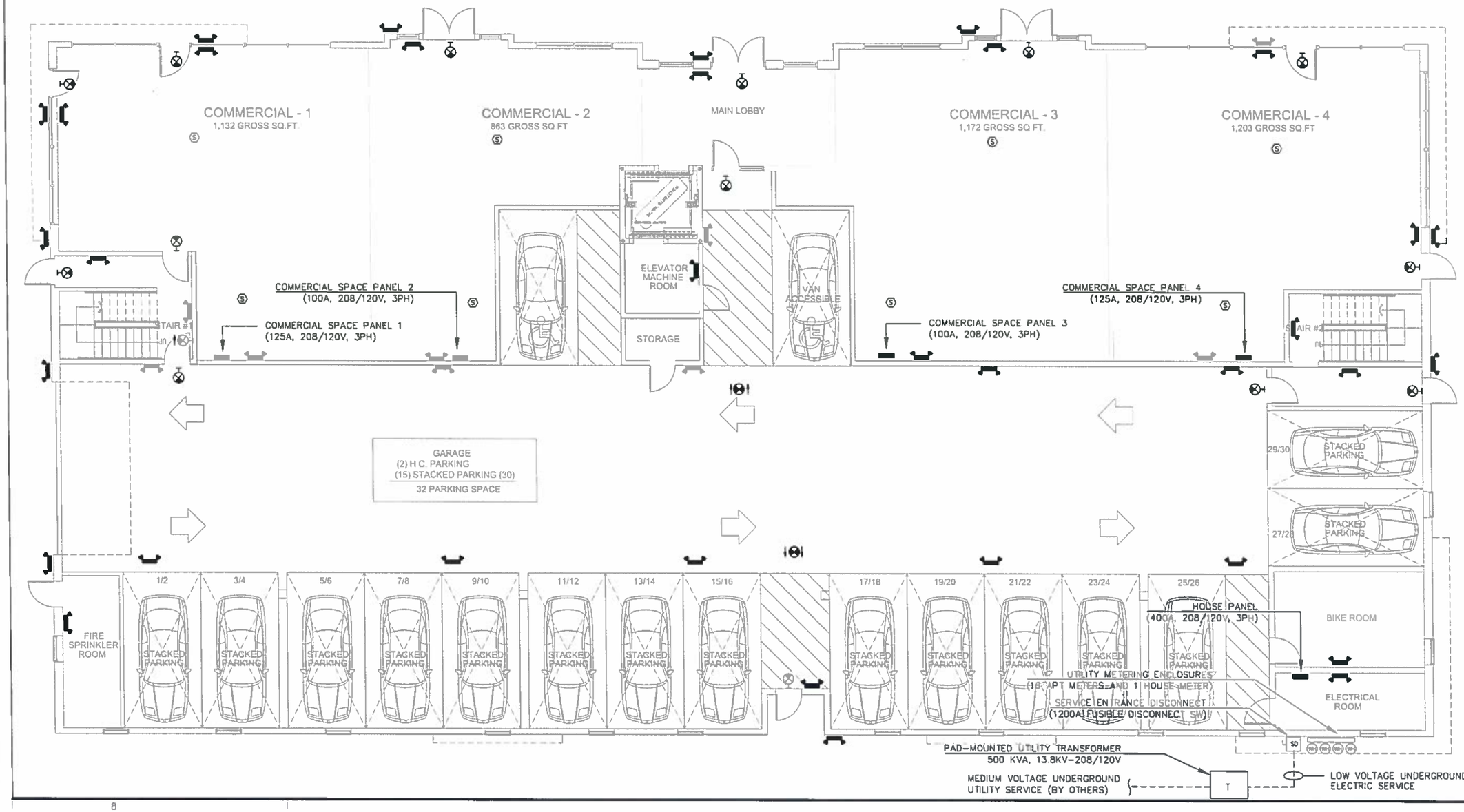

REVISIONS

REV	DATE	DESCRIPTION	DRAWN	CHKD
8				
7				
6				
5				
4				
3				
2				
1	5-18-20	REV COMMERCIAL & HOUSE PANEL RATING		

COMMONWEALTH OF MASSACHUSETTS
WILLIAM E. EKSTROM
ELECTRICAL
No. 47374
REGISTERED PROFESSIONAL ENGINEER
5-28-20

ENGINEERS STAMP

ELECTRICAL ENGINEER
WILLIAM EKSTROM, PE
ENGINEERING LICENSE #47374
LYNN, MA

OWNER
LEGACY BUILDERS
11 PLACID ROAD
NEWTON, MA

PROJECT TITLE & ADDRESS
MULTI-FAMILY RESIDENCE
12 POND STREET
ASHLAND, MA

POWER PANEL, SMOKE/CO DETECTOR & EMERGENCY LIGHTING LOCATIONS
GARAGE & 1ST FLOOR PLAN

PROJECT #	EE20-003	SHEET
DATE	03-05-20	E-1
SCALE	NTS	

SYMBOLS LEGEND

- 100A, 120/208 VOLT, 1 PHASE, 3 WIRE RECESSED POWER PANEL (UNLESS OTHERWISE INDICATED)
- (S) SMOKE ALARM, MULTI-STATION TYPE, 120V POWER CONNECT TO POWER PANEL IN APPARTMENT
- (C) CARBON MONOXIDE DETECTOR, MULTI-STATION TYPE, 120V POWER CONNECT TO POWER PANEL IN APPARTMENT
- (SC) COMBINATION SMOKE DETECTOR AND CARBON MONOXIDE DETECTOR MULTI-STATION TYPE, 120V POWER CONNECT TO POWER PANEL IN APPARTMENT
- EMERGENCY LIGHTING BATTERY UNIT WITH TWO LAMP HEADS [CONECT TO NORMAL LIGHTING CIRCUIT IN IMMEDIATE AREA]
- EXIT SIGN, WALL MOUNTED. PROVIDE UNIT WITH BATTERY BACKUP.
- EXIT SIGN, CEILING MOUNTED, SINGLE FACE, ARROW INDICATES. DIRECTION OF EGRESS.
- EXIT SIGN, CEILING MOUNTED, DOUBLE FACE, ARROW INDICATES DIRECTION OF EGRESS.

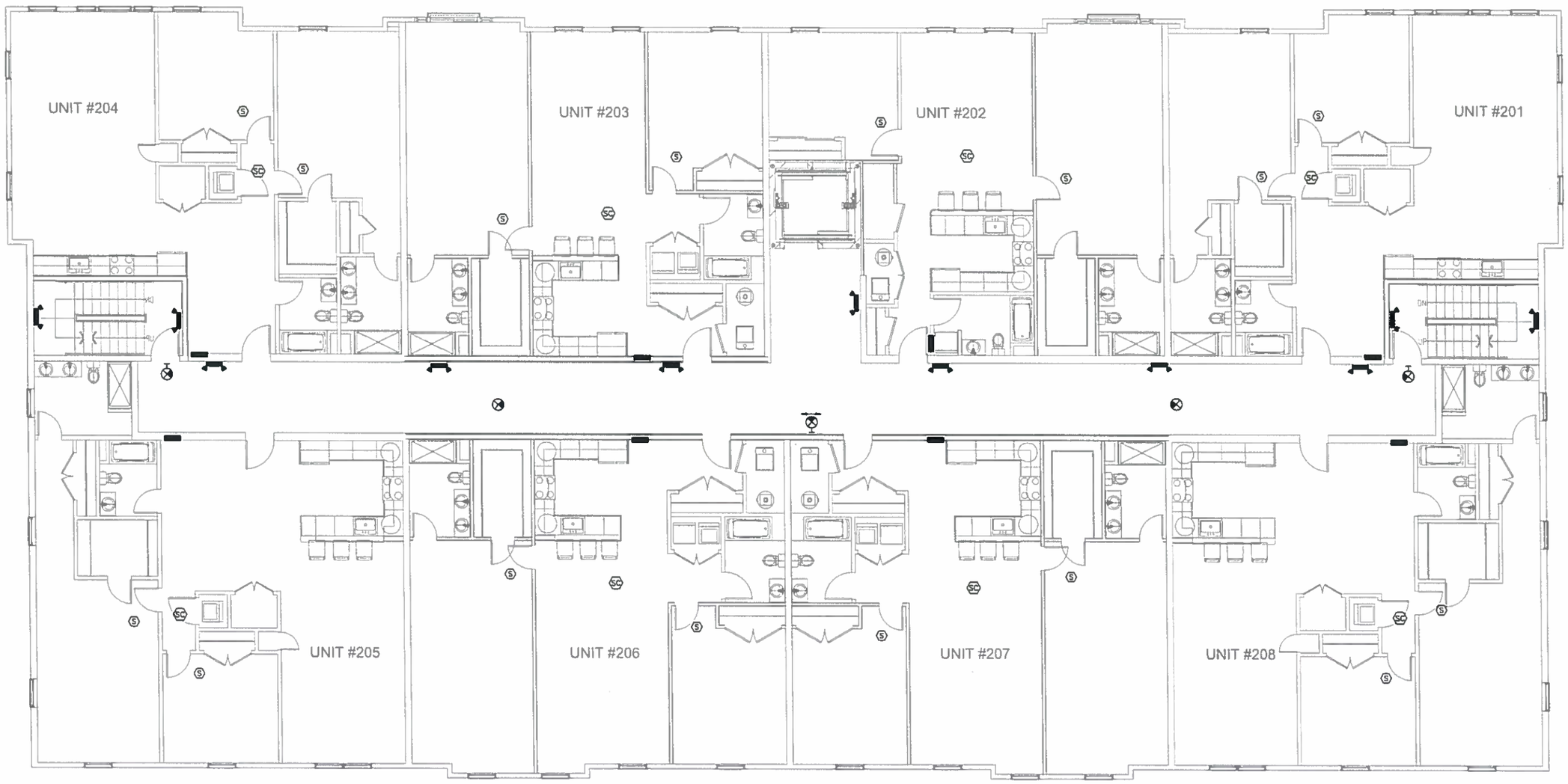

REVISIONS

8			
7			
6			
5			
4			
3			
2			
1			
NO.	DATE	BY	DESCRIPTION

COMMONWEALTH OF MASSACHUSETTS
WILLIAM E. EKSTROM
ELECTRICAL
No. 47374
REGISTERED
PROFESSIONAL ENGINEER
ENGINEERS STAMP
5.28.20

ELECTRICAL ENGINEER
WILLIAM EKSTROM, PE
ENGINEERING LICENSE #47374
LYNN, MA

OWNER
LEGACY BUILDERS
11 PLACID ROAD
NEWTON, MA

PROJECT TITLE & ADDRESS
MULTI-FAMILY RESIDENCE
12 POND STREET
ASHLAND, MA

DRAWING DESCRIPTION
PWR PANELS, SMOKE/CO DETECTORS & EMERGENCY LIGHTING LOCATIONS
SECOND FLOOR PLAN

PROJECT #	EE20-003	SHEET
DATE	03-05-20	E-2
SCALE	NTS	

8 7 6 5 4 3 2 1

SYMBOLS LEGEND

- 100A, 208/120 VOLT, 1 PHASE, 3 WIRE RECESSED POWER PANEL (UNLESS OTHERWISE INDICATED)
- (S) SMOKE ALARM, MULTI-STATION TYPE, 120V POWER CONNECT TO POWER PANEL IN APPARTMENT
- (C) CARBON MONOXIDE DETECTOR, MULTI-STATION TYPE, 120V POWER CONNECT TO POWER PANEL IN APPARTMENT
- (SC) COMBINATION SMOKE DETECTOR AND CARBON MONOXIDE DETECTOR MULTI-STATION TYPE, 120V POWER CONNECT TO POWER PANEL IN APPARTMENT
- EMERGENCY LIGHTING BATTERY UNIT WITH TWO LAMP HEADS [CONECT TO NORMAL LIGHTING CIRCUIT IN IMMEDIATE AREA]
- EXIT SIGN, WALL MOUNTED. PROVIDE UNIT WITH BATTERY BACKUP.
- EXIT SIGN, CEILING MOUNTED, SINGLE FACE, ARROW INDICATES. DIRECTION OF EGRESS. PROVIDE UNIT WITH BATTERY BACKUP.
- EXIT SIGN, CEILING MOUNTED, DOUBLE FACE, ARROW INDICATES DIRECTION OF EGRESS. PROVIDE UNIT WITH BATTERY BACKUP.

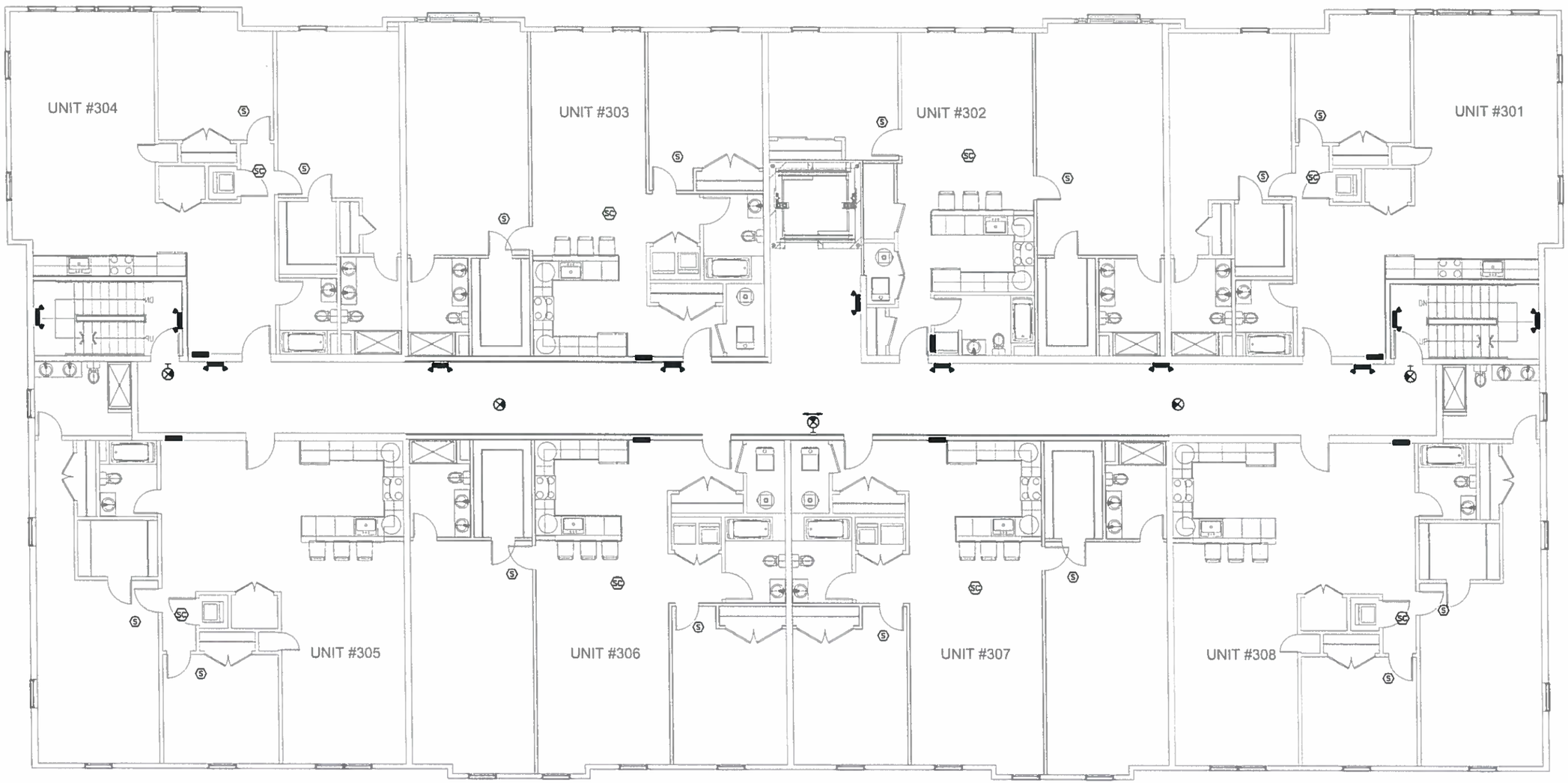

REVISIONS

NO	DATE	DESCRIPTION	DRAWN BY
9			
8			
7			
6			
5			
4			
3			
2			
1			

COMMONWEALTH OF MASSACHUSETTS
WILLIAM E. EKSTROM
ELECTRICAL
No. 47374
REGISTERED
PROFESSIONAL ENGINEER
5-28-20

ENGINEERS STAMP

ELECTRICAL ENGINEER

WILLIAM EKSTROM, PE

ENGINEERING LICENSE #47374

LYNN, MA

OWNER

LEGACY BUILDERS

11 PLACID ROAD

NEWTON, MA

PROJECT TITLE & ADDRESS

MULTI-FAMILY RESIDENCE

12 POND STREET

ASHLAND, MA

DRAWING DESCRIPTION

PWR PANELS, SMOKE/CO DETECTORS & EMERGENCY LIGHTING LOCATIONS THIRD FLOOR PLAN

PROJECT #	EE20-003	SHEET
DATE	03-06-20	E-3
SCALE	NTS	

8 7 6 5 4 3 2 1

E D C B A

SYMBOLS LEGEND & ABBREVIATIONS

$\ominus^{\#}$	DUPLEX RECEPTACLE, # DENOTES CIRCUIT NUMBER WITHIN PANEL P1	—— P1–#	HOMERUN TO PANEL P1. "#" REFERS TO CIRCUIT NUMBER. REFER TO PANEL DIRECTORY FOR SINGLE POLE BREAKER RATING
$\ominus^{\#}$	DUPLEX GFCI RECEPTACLE, # DENOTES CIRCUIT NUMBER WITHIN PANEL P1	—— P1–#,#	HOMERUN TO PANEL P1. "#,#" REFERS TO CIRCUIT NUMBERS. REFER TO PANEL DIRECTORY FOR 2–POLE BREAKER RATING
$\ominus^{\#}$	SINGLE RECEPTACLE, # DENOTES CIRCUIT NUMBER WITHIN PANEL P1	▬	100A, 208/120 VOLT, 1 PHASE, 3 WIRE RECESSED POWER PANEL
$\ominus^{\#}$	SINGLE RECEPTACLE, 208V, # DENOTES CIRCUIT NUMBER WITHIN PANEL P1	$\#\ O_a$	EXHAUST FAN, # DENOTES CIRCUIT NUMBER "a" DENOTES SWITCH CONTROLLER
O_a	RECESSED LED DOWNLIGHT, "a" DENOTES LIGHT SWITCH CONTROL ZONE	20A/1P	20 AMP, 120V, SINGLE POLE BREAKER
S_a	SINGLE POLE LIGHT SWITCH, "a" DENOTES LIGHT SWITCH CONTROL ZONE	30A/2P	30 AMP, 240V, DOUBLE POLE BREAKER
		GFCI	GROUND FAULT CIRCUIT INTERUPTER
S_3	3–WAY LIGHT SWITCH	MLO	MAIN LUG ONLY (NO MAIN BREAKER)
		CIR	CIRCUIT

PANEL P1 — VOLTAGE: 208/120V, 1PH, 3W; BUS: 100A MAIN: MLO AIC: 22KA

CIR.	AMPS/POLES	DESCRIPTION OF LOAD	DESCRIPTION OF LOAD	AMPS/POLES	CIR.
1	20A/1P	REFRIGERATOR	GAS HEATING UNIT	15A/1P	2
3	20A/1P	MICROWAVE	GAS WATER HEATER	15A/1P	4
5	20A/1P	DISHWASHER	WASHING MACHINE	20A/1P	6
7	20A/1P	GARBAGE DISPOSER	ELECTRIC DRYER	30A/2P	8
9	20A/1P	COUNTERTOP RECEPTACLES A	–	–	10
11	20A/1P	COUNTERTOP RECEPTACLES B	CONDENSOR	30A/2P	12
13	20A/1P	RECEPTS/LGHTNG, ENTRY/KITCH	–	–	14
15	20A/1P	RECEPTS/LGHTS LIVING ROOM	RECEPTACLE AT CONDENSOR	20A/1P	16
17	20A/1P	RECEPTS/LGHTS, MASTER BDRM	SPARE	15A/1P	18
19	20A/1P	RECEPTS/LGHTS MSTR BATHRM	SPARE	15A/1P	20
21	20A/1P	RECEPTS/LGHTS, 2ND BDRM	SPARE	20A/1P	22
23	20A/1P	RECEPTS/LGHTS, MAIN BATHRM	SPARE	20A/1P	24

PANELBOARD DIRECTORY (2-BEDROOM APARTMENT)

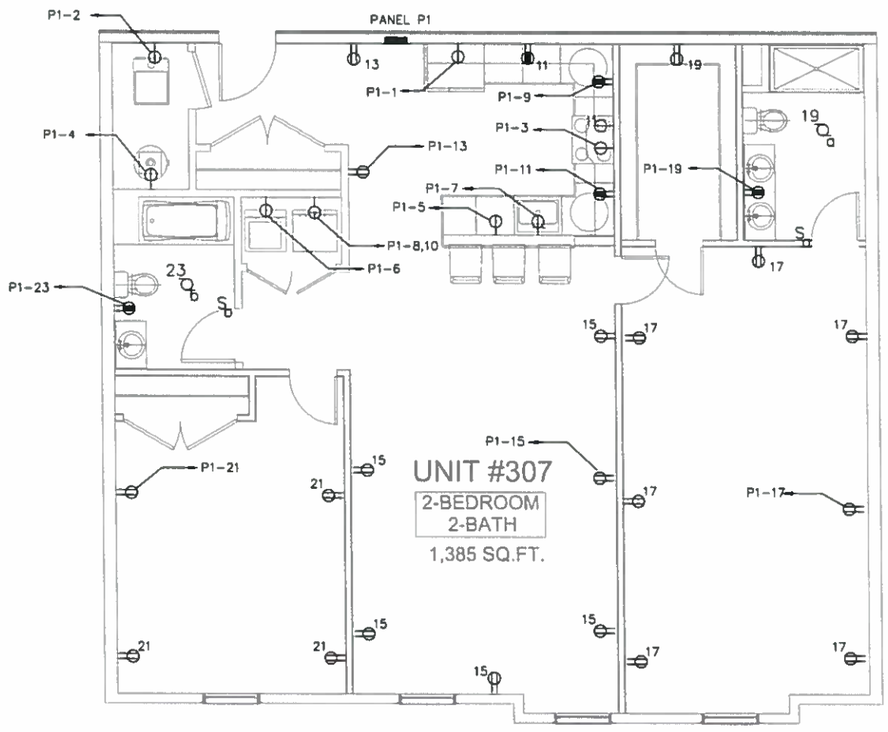

2–BEDROOM APARTMENT
TYPICAL RECEPTACLE CIRCUITING

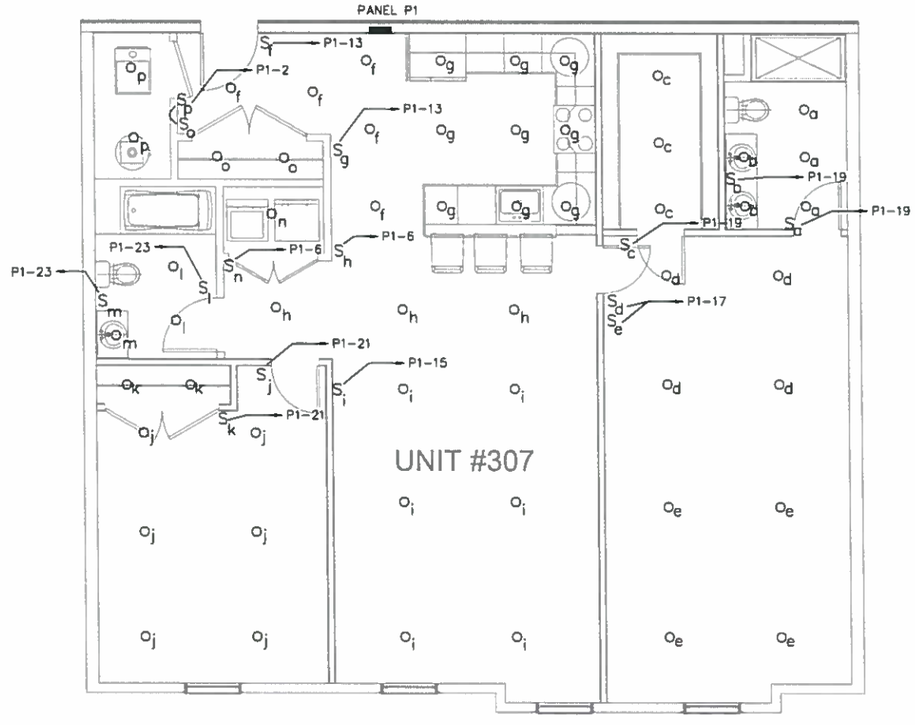

2–BEDROOM APARTMENT
TYPICAL LIGHTING CIRCUITING

REVISIONS

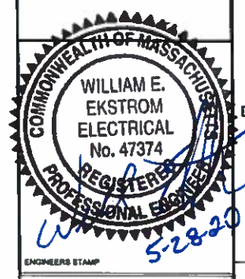

ELECTRICAL ENGINEER
WILLIAM EKSTROM, PE
ENGINEERING LICENSE #47374
LYNN, MA

OWNER
LEGACY BUILDERS
11 PLACID ROAD
NEWTON, MA

PROJECT TITLE & ADDRESS
MULTI-FAMILY RESIDENCE
12 POND STREET
ASHLAND, MA

DRAWING DESCRIPTION
TYPICAL APARTMENT POWER & LIGHTING CIRCUITING AND PANEL SCHEDULES

PROJECT #	EE20-003
DATE	03-06-20
SCALE	NTS

SHEET E-4