DAVID MINDESS SCHOOL
90 CONCORD STREET, ASHLAND, MA 01721

NOTICE OF INTENT &
STORMWATER PERMIT APPLICATION

JUNE 14TH, 2021

SHEET INDEX:

SURVEY
EX1.0 EXISTING CONDITIONS
EX2.0 EXISTING CONDITIONS
EX3.0 EXISTING CONDITIONS
EX4.0 EXISTING CONDITIONS

CIVIL
C1.0 CIVIL NOTES, LEGENDS AND ABBREVIATIONS
C1.1 OVERALL SITE PLAN
C2.0 EROSION AND SEDIMENTATION CONTROL PLAN
C2.1 EROSION AND SEDIMENTATION CONTROL PLAN
C2.2 EROSION AND SEDIMENTATION CONTROL PLAN
C2.3 EROSION AND SEDIMENTATION CONTROL PLAN
C3.0 SITE DEMOLITION PLAN
C3.1 SITE DEMOLITION PLAN
C3.2 SITE DEMOLITION PLAN
C3.3 SITE DEMOLITION PLAN
C4.0 ROADWAY LAYOUT AND MATERIALS PLAN
C4.1 ROADWAY LAYOUT AND MATERIALS PLAN
C4.2 ROADWAY LAYOUT AND MATERIALS PLAN
C4.3 ROADWAY LAYOUT AND MATERIALS PLAN
C5.0 SIGNAGE AND STRIPING PLAN
C5.1 SIGNAGE AND STRIPING PLAN
C5.2 SIGNAGE AND STRIPING PLAN
C5.3 SIGNAGE AND STRIPING PLAN
C6.0 SITE UTILITY PLAN
C6.1 SITE UTILITY PLAN
C6.2 SITE UTILITY PLAN
C6.3 SITE UTILITY PLAN
C7.0 SITE DRAINAGE PLAN
C7.1 SITE DRAINAGE PLAN
C7.2 SITE DRAINAGE PLAN
C7.3 SITE DRAINAGE PLAN
C8.0 EROSION AND SEDIMENTATION CONTROL DETAILS
C8.1 CIVIL DETAILS
C8.2 CIVIL DETAILS
C8.3 CIVIL DETAILS

LANDSCAPE
L1.00 OVERALL SITE PLAN
L2.00 LAYOUT & MATERIALS PLAN 1
L2.10 LAYOUT & MATERIALS PLAN 2
L2.20 LAYOUT & MATERIALS PLAN 3
L2.30 LAYOUT & MATERIALS PLAN 4
L3.00 GRADING PLAN 1
L3.10 GRADING PLAN 2
L3.20 GRADING PLAN 3
L3.30 GRADING PLAN 4
L4.00 PLANTING PLAN
L5.00 SITE SECTIONS
L6.10 SITE FURNISHINGS DETAILS
L6.20 BALL FIELD LAYOUTS & DETAILS
L6.30 PLANTING DETAILS

CONSTRUCTION MANAGER PHASING
PH.1 PHASE 1: NEW CONSTRUCTION
PH.2 PHASE 2A: DEMO & SITE PREP
PH.3 PHASE 2B: NEW SCHOOL OPENS / DEMO
PH.4 PROJECT COMPLETE

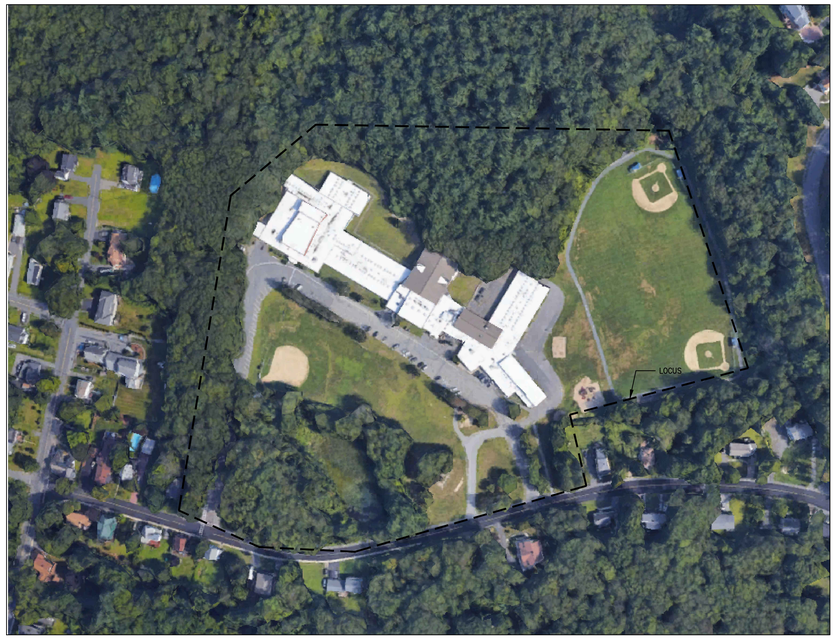

LOCUS MAP
NOT TO SCALE

90 Concord Street, Ashland, MA

FLANSBURGH
77 NORTH WASHINGTON STREET
BOSTON, MA 02114-1910
FLANSBURGH.COM

Owner Project Manager

Compass Project Management, Inc.
Owners' Project Manager
One Edgewater Drive, Suite 204
Norwood, MA 02062

Consultants

Nitsch Engineering, Inc.
Land Survey/ Traffic/ Civil Engineers
2 Center Plaza
Boston, MA 02108

Stimson Studio
Landscape Architect
288 Norfolk Street
Cambridge, MA 02139

Engineers Design Group Inc
Structural Engineer
350 Main Street
Malden, MA 02148

Stefura Associates, Inc.
FF&E and Casework
77 North Washington Street
Boston, MA 02114

Crabtree McGrath Associates, Inc.
FF&E and Casework
161 West Main Street
Georgetown, MA 01833

Vanderweil Engineers, LLP
Mechanical Electrical Technology Plumbing & Fire Protection Engineers
274 Summer Street
Boston, MA 02210

Fuss and O'Neill, Inc.
Hazardous Materials
108 Myrtle Street, Suite 502
Quincy, MA 02171

AM Fogarty
Cost Estimators
175 Derby St, Ste 5
Hingham, Massachusetts 02043

No.	Date	Note
REVISIONS		

No.	Date	Note
ISSUE		

Stamp

NITSCH PROJECT #13609



For Permitting Only

Key Plan



Sheet Title
Segment A
Civil Cover Sheet

Drawn By NJB	Project ID 1914.00
Reviewed By BMV/JEG	Scale NOT TO SCALE
Issue Date 06.14.2021	Plot Date 06.11.2021

Sheet No.
C0.0

Nitsch Project #13609

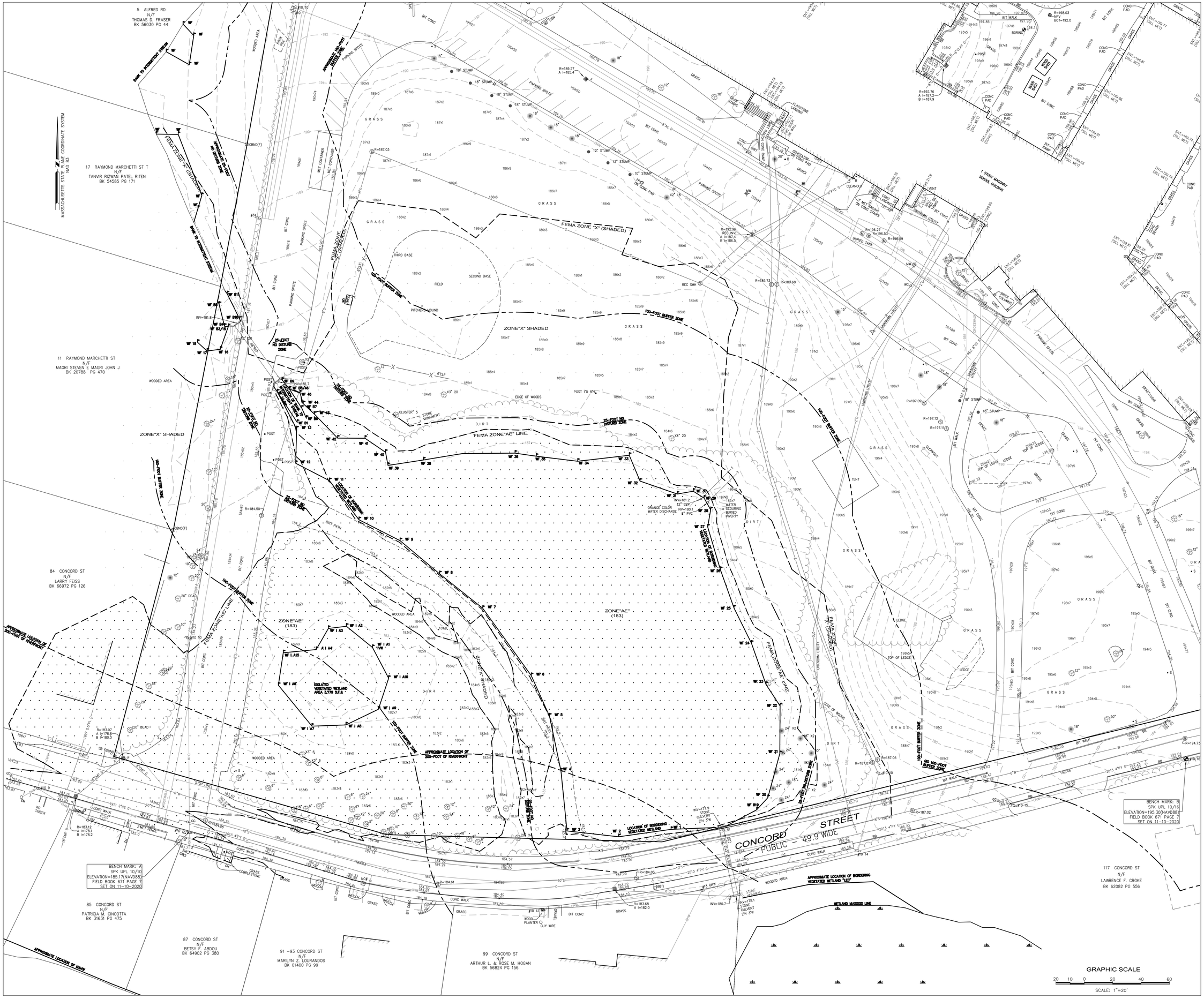

90 Concord Street, Ashland, MA

FLANSBURGH

77 NORTH WASHINGTON STREET
BOSTON, MA 02114-1910

FLANSBURGH.COM

Owner Project Manager

Compass Project Management, Inc.
Owners' Project Manager
One Edgewater Drive, Suite 204
Norwood, MA 02062

Consultants

Nitsch Engineering, Inc.
Land Survey/ Traffic/ Civil Engineers
2 Center Plaza
Boston, MA 02108

Stimson Studio
Landscape Architect
288 Norfolk Street
Cambridge, MA 02139

Engineers Design Group Inc
Structural Engineer
350 Main Street
Malden, MA 02148

Stefura Associates, Inc.
FF&E and Casework
77 North Washington Street
Boston, MA 02114

Crabtree McGrath Associates, Inc.
FF&E and Casework
161 West Main Street
Georgetown, MA 01833

Vanderweil Engineers, LLP
Mechanical Electrical Technology
Plumbing & Fire Protection Engineers
274 Summer Street
Boston, MA 02210

Fuss and O'Neill, Inc.
Hazardous Materials
108 Myrtle Street, Suite 502
Quincy, MA 02171

AM Fogarty
Cost Estimators
175 Derby St, Ste 5
Hingham, Massachusetts 02043

No.	Date	Note
		REVISIONS

No.	Date	Note
		ISSUE

Stamp

COMMONWEALTH OF MASSACHUSETTS
MARK E. VIOLETTE #40768
REGISTERED PROFESSIONAL ENGINEER
Mark Violette
6.11.21

For Permitting Only

Key Plan

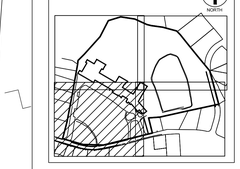

Sheet Title

Segment A

Existing Conditions

Drawn By: MRD	Project ID: 1914.00
Reviewed By: MEV	Scale: 1"=20'
Issue Date: 06.14.2021	Plot Date: 06.11.2021
Sheet No.	

EX1.0

Nitsch Project #13805

90 CONCORD ST
N/F
TOWN OF ASHLAND
BK 08063 PG 0449
PID 0140140018500000
28± ACRES (DEED)
26.74± (CALC.)

FISKE ROAD
40' WIDE RIGHT OF WAY

APPROXIMATE PROPERTY LINE

APPROXIMATE 100-FOOT BUFFER ZONE

APPROXIMATE 25-FOOT NO DISTURB ZONE

BENCH MARK: C
SQ. CUT STONE
RET WALL
ELEVATION=230.12(NAVD88)
FIELD BOOK 671 PAGE 7
SET ON 11-10-2020

BENCH MARK: B
SPK UPL 10/16
ELEVATION=195.30(NAVD88)
FIELD BOOK 671 PAGE 7
SET ON 11-10-2020

N/F
OWNER UNKNOWN
BK PG

140 -142 CONCORD ST
N/F
JENNIFER N. NARDI
BK 62403 PG 1

138 CONCORD ST
N/F
QUINTANILLA CARLOS MORGAN STEPHEN J
BK 47912 PG 431

130 CONCORD ST
N/F
NIKOLAY V. BURINSKIY
BK 28081 PG 250

126 CONCORD ST
N/F
GREGORY BERGERON
BK 63723 PG 425

131 -133 CONCORD ST
N/F
MARY ELLEN DAMICO
BK 28007 PG 92

123 CONCORD ST
N/F
THOMAS A. LEACU
BK 64549 PG 508

117 CONCORD ST
N/F
LAWRENCE F. CROKE
BK 62082 PG 556

148 CONCORD ST
N/F
DAVID WHITTY
BK 29678 PG 303

WETLAND MARKER LANE

MASSACHUSETTS STATE PLANE COORDINATE SYSTEM NAD 83

GRAPHIC SCALE
20 10 0 20 40 60
SCALE: 1"=20'

ASHLAND, MASSACHUSETTS
Incorporated 1846
90 Concord Street, Ashland, MA

FLANSBURGH
77 NORTH WASHINGTON STREET
BOSTON, MA 02114-1910
FLANSBURGH.COM

Owner Project Manager

Compass Project Management, Inc.
Owners' Project Manager
One Edgewater Drive, Suite 204
Norwood, MA 02062

Consultants

Nitsch Engineering, Inc.
Land Survey/ Traffic/ Civil Engineers
2 Center Plaza
Boston, MA 02108

Stimson Studio
Landscape Architect
288 Norfolk Street
Cambridge, MA 02139

Engineers Design Group Inc
Structural Engineer
350 Main Street
Malden, MA 02148

Stefura Associates, Inc.
FF&E and Casework
77 North Washington Street
Boston, MA 02114

Crabtree McGrath Associates, Inc.
FF&E and Casework
161 West Main Street
Georgetown, MA 01833

Vanderweil Engineers, LLP
Mechanical Electrical Technology
Plumbing & Fire Protection Engineers
274 Summer Street
Boston, MA 02210

Fuss and O'Neill, Inc.
Hazardous Materials
108 Myrtle Street, Suite 502
Quincy, MA 02171

AM Fogarty
Cost Estimators
175 Derby St, Ste 5
Hingham, Massachusetts 02043

No.	Date	Note
REVISIONS		

No.	Date	Note
ISSUE		

Stamp

COMMONWEALTH OF MASSACHUSETTS
MARK E. VIOLETTE
#40768
REGISTERED PROFESSIONAL ENGINEER
6-11-21

For Permitting Only

Key Plan

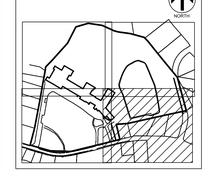

Sheet Title
Segment A
Existing Conditions

Drawn By: MRD	Project ID: 1914.00
Reviewed By: MEV	Scale: 1"=20'
Issue Date: 06.14.2021	Plot Date: 06.11.2021

Sheet No.
EX2.0

Nitsch Project #13655

UTILITY INFORMATION STATEMENT

1. THE SUB-SURFACE UTILITY INFORMATION SHOWN HEREON IS COMPILED BASED ON FIELD SURVEY INFORMATION, RECORD INFORMATION AS SUPPLIED BY THE APPROPRIATE UTILITY COMPANIES, AND PLAN INFORMATION SUPPLIED BY THE CLIENT, IF ANY; THEREFORE WE CANNOT GUARANTEE THE ACCURACY OF SAID COMPILED SUB-SURFACE INFORMATION TO ANY CERTAIN DEGREE OF STATED TOLERANCE. ONLY PHYSICALLY LOCATED SUB-SURFACE UTILITY FEATURES FALL WITHIN NORMAL STANDARD OF CARE ACCURACIES.

2. THE LOCATIONS OF UNDERGROUND PIPES, CONDUITS, AND STRUCTURES HAVE BEEN DETERMINED FROM SAID INFORMATION, AND ARE APPROXIMATE ONLY. COMPILED LOCATIONS OF ANY UNDERGROUND STRUCTURES, NOT VISIBLY OBSERVED AND LOCATED, CAN VARY FROM THEIR ACTUAL LOCATIONS.

3. ADDITIONAL BURIED UTILITIES/STRUCTURES MAY BE ENCOUNTERED.

4. THE STATUS OF UTILITIES, WHETHER ACTIVE, ABANDONED, OR REMOVED, IS AN UNKNOWN CONDITION AS FAR AS OUR COMPILATION OF THIS INFORMATION.

5. IT IS INCUMBENT UPON INDIVIDUALS USING THIS INFORMATION TO UNDERSTAND THAT COMPILING UTILITY INFORMATION IS NOT EXACT, AND IS SUBJECT TO CHANGE BASED UPON VARYING PLAN INFORMATION RECEIVED AND ACTUAL LOCATIONS.

6. THE ACCURACY OF MEASURED UTILITY INVERTS AND PIPE SIZES IS SUBJECT TO FIELD CONDITIONS, THE ABILITY TO MAKE VISUAL OBSERVATIONS, DIRECT ACCESS TO THE VARIOUS ELEMENTS AND OTHER MATTERS.

7. THE PROPER UTILITY ENGINEERING/COMPANY SHOULD BE CONSULTED AND THE ACTUAL LOCATIONS OF SUBSURFACE STRUCTURES SHOULD BE VERIFIED IN THE FIELD (V.I.F.) BEFORE PLANNING FUTURE CONNECTIONS. CONTACT THE DIG SAFE CALL CENTER AT 1-888-344-7233, SEVENTY-TWO HOURS PRIOR TO EXCAVATION, BLASTING, GRADING, AND/OR PAVING.

NOTES

1. THIS DOCUMENT IS AN INSTRUMENT OF SERVICE OF NITSCH ENGINEERING. IT IS ISSUED TO FLANSBURGH ARCHITECT FOR PURPOSES RELATED DIRECTLY AND SOLELY TO NITSCH ENGINEERING'S SCOPE OF SERVICES UNDER CONTRACT WITH FLANSBURGH ARCHITECTS FOR DESIGN OF A NEW SCHOOL ON THE EXISTING MINDESS ELEMENTARY SCHOOL. ANY USE OR REUSE OF THIS DOCUMENT FOR ANY REASON BY ANY PARTY FOR PURPOSES UNRELATED DIRECTLY AND SOLELY TO SAID CONTRACT AND PROJECT SHALL BE AT THE USER'S SOLE AND EXCLUSIVE RISK AND LIABILITY, INCLUDING LIABILITY FOR VIOLATION OF COPYRIGHT LAWS, UNLESS WRITTEN AUTHORIZATION IS GIVEN THEREFOR BY NITSCH ENGINEERING.

2. THE PURPOSE OF THIS PLAN IS TO SHOW EXISTING CONDITIONS AS THE RESULT OF AN ON-THE-GROUND INSTRUMENT SURVEY WHICH OCCURRED 11/6-11/24 2021.

3. HORIZONTAL COORDINATES REFER TO NAD83 BASED ON GPS RTK OBSERVATIONS.

4. ELEVATION REFERS TO NAVD88 VERTICAL BASED ON GPS RTK OBSERVATIONS.

5. THE INFORMATION CONTAINED ON THE DISK OR ELECTRONIC DRAWING FILE ACCOMPANYING THIS PLAN MUST BE COMPARED TO THE SEALED AND SIGNED HARD COPY OF THE PLAN TO ENSURE THE ACCURACY OF ALL INFORMATION AND TO ENSURE NO CHANGES, ALTERATIONS, OR MODIFICATIONS HAVE BEEN MADE. RELIANCE SHALL NOT BE MADE ON A DOCUMENT TRANSMITTED BY COMPUTER OR OTHER ELECTRONIC MEANS UNLESS FIRST COMPARED TO THE ORIGINAL SEALED DOCUMENT ISSUED AT THE TIME OF THE SURVEY. DUE TO THE CRITICAL NATURE OF SURVEYING, DATA ACQUISITION, AND AUTOCAD PLAN DEVELOPMENT, IF CRITICAL DIMENSIONAL INFORMATION IS NEEDED AND IS NOT SPECIFICALLY SHOWN ON THE ELECTRONIC DRAWING FILE, PLEASE CONTACT NITSCH ENGINEERING.

6. BORINGS LOCATIONS SHOWN BASED ON PROPOSED LOCATIONS.

LEGEND

	CATCH BASIN
C	CABLE TELEVISION MANHOLE
D	DRAIN MANHOLE
E	ELECTRIC MANHOLE
M	MISCELLANEOUS MANHOLE
S	SEWER MANHOLE
T	TELEPHONE MANHOLE
W	WATER MANHOLE
GSO O	GAS SHUT-OFF
WSO O	WATER SHUT-OFF
GG O	GAS GATE
WG O	WATER GATE
CLEANOUT O	CLEANOUT
	FIRE HYDRANT
DS O	DOWN SPOUT
UP	UTILITY POLE
UP W/ UE	UTILITY POLE WITH CONDUIT LINE TO GROUND
	LIGHT POLE
HH	HAND HOLE
PM	PARKING METER
S	SIGN POST
12"	DECIDUOUS TREE WITH TRUNK DIAMETER
12"	CONIFEROUS TREE WITH TRUNK DIAMETER
	HANDICAP PARKING
601±43	SPOT ELEVATION
CLF	CHAIN LINK FENCE
BB	BITUMINOUS CONCRETE BERM
VCC	VERTICAL CONCRETE CURB
WCR	WHEELCHAIR RAMP
LST	LANDSCAPE TIMBER
R=	RIM ELEVATION EQUALS
I=	INVERT ELEVATION EQUALS
TH=	TOP OF HOOD ELEVATION EQUALS
NPV	NO PIPES VISIBLE
601±STW	TOP OF WALL ELEVATION
CATV	UNDERGROUND CABLE TELEVISION LINE
D	UNDERGROUND DRAIN LINE
E	UNDERGROUND ELECTRIC LINE
G	UNDERGROUND GAS LINE
S	UNDERGROUND SEWER LINE
T	UNDERGROUND TELEPHONE LINE
W	UNDERGROUND WATER LINE
OHW	OVERHEAD WIRES
	MONITORING WELL
	BENCH MARK
TP	PROPOSED BORINGS
WF 1	WETLAND FLAG BY DELINEATION
WF	WETLAND APPROXIMATED

GRAPHIC SCALE

20 10 0 20 40 60

SCALE: 1"=20'

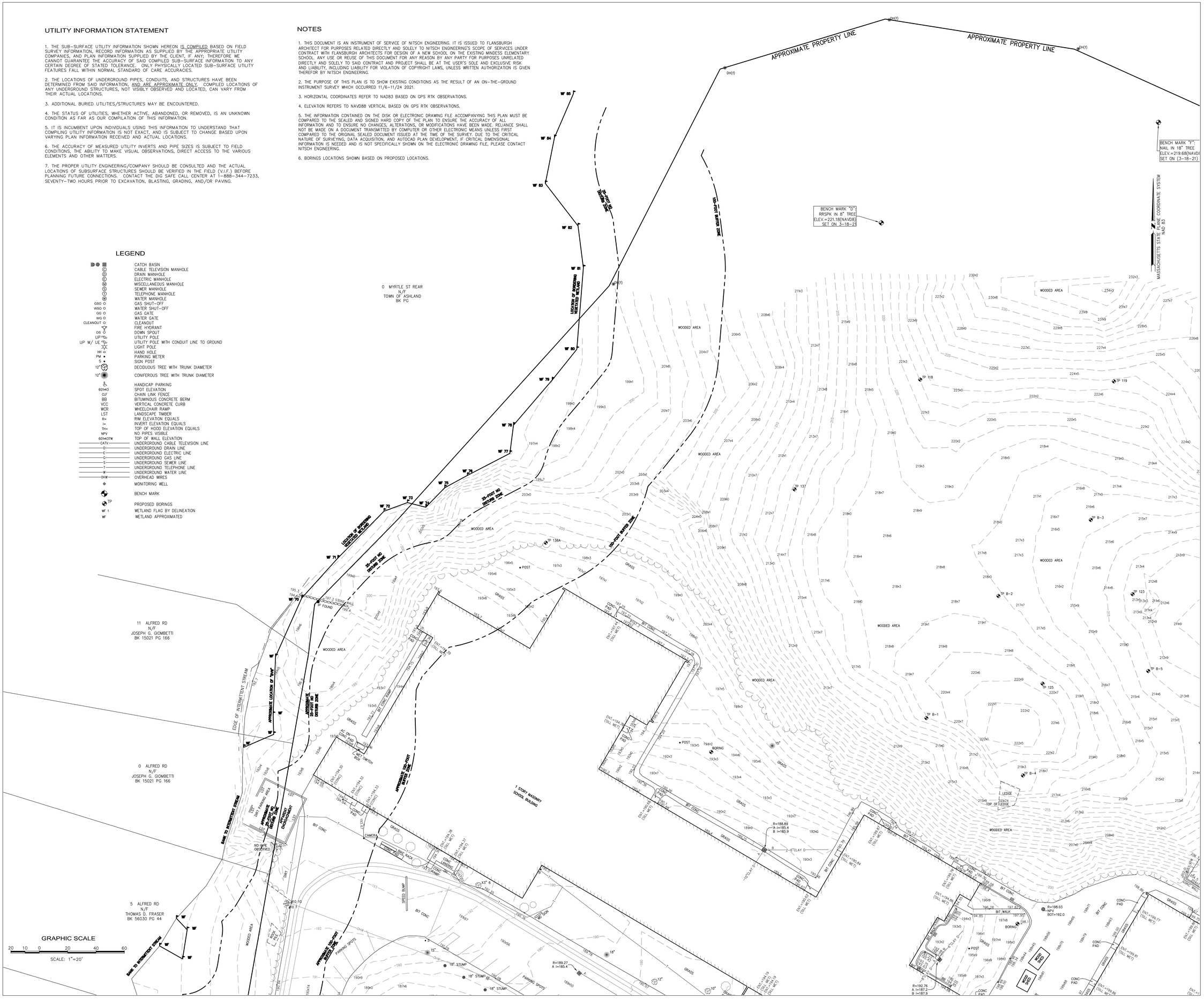

90 Concord Street, Ashland, MA

FLANSBURGH

77 NORTH WASHINGTON STREET
BOSTON, MA 02114-1910
FLANSBURGH.COM

Owner Project Manager

Compass Project Management, Inc.
Owners' Project Manager
One Edgewater Drive, Suite 204
Norwood, MA 02062

Consultants

Nitsch Engineering, Inc.
Land Survey/ Traffic/ Civil Engineers
2 Center Plaza
Boston, MA 02108

Stimson Studio
Landscape Architect
288 Norfolk Street
Cambridge, MA 02139

Engineers Design Group Inc
Structural Engineer
350 Main Street
Malden, MA 02148

Stefura Associates, Inc.
FF&E and Casework
77 North Washington Street
Boston, MA 02114

Crabtree McGrath Associates, Inc.
FF&E and Casework
161 West Main Street
Georgetown, MA 01833

Vanderweil Engineers, LLP
Mechanical Electrical Technology
Plumbing & Fire Protection Engineers
274 Summer Street
Boston, MA 02210

Fuss and O'Neill, Inc.
Hazardous Materials
108 Myrtle Street, Suite 502
Quincy, MA 02171

AM Fogarty
Cost Estimators
175 Derby St, Ste 5
Hingham, Massachusetts 02043

No.	Date	Note
		REVISIONS
No.	Date	Note
		ISSUE

Stamp

COMMONWEALTH OF MASSACHUSETTS
MARK E. VIOLETTE
#40768
REGISTERED LAND SURVEYOR

Mark Violette
6.11.21

For Permitting Only

Key Plan

NORTH

Sheet Title

Segment A

Existing Conditions

Drawn By MRD	Project ID 1914.00
Reviewed By MEV	Scale 1"=20'
Issue Date 06.14.2021	Plot Date 06.11.2021

Sheet No.

EX3.0

Nitsch Project #19020

0 MYRTLE ST REAR
N/F
TOWN OF ASHLAND
BK PG

APPROXIMATE PROPERTY LINE

BENCH MARK "F":
NAIL IN 18" TREE
ELEV.=219.68(NAVD88)
SET ON (3-18-21)

MASSACHUSETTS STATE PLANE COORDINATE SYSTEM NAD 83

BENCH MARK "E":
RRSPK IN 8" TREE
ELEVATION=220.26(NAVD88)
SET ON (3-18-21)

6 GOODNOW AVE
N/F
RANDY D. & ANNE G. KRAUSS
BK 48948 PG 379

6 FISKE RD
N/F
DAVID C. DEGEORGE
BK 50359 PG 26

7 FISKE RD
N/F
JEREMY RAMSEY
BK 49868 PG 554

62 FOUNTAIN ST
N/F
KATHARINE PHIPPS-RAM
BK 53983 PG 136

51 BELLVIEW HEIGHTS
N/F
STEVEN F. WHITTREDGE
BK 01071 PG 8

90 CONCORD ST
N/F
TOWN OF ASHLAND
BK 08063 PG 0449
PID# 0140140018500000
28± ACRES (DEED)
26.74± (CALC.)

WF 1-B1 IVB
WF 1-B2
WF 1-B3
WF 1-B4
WF 1-B5
WF 1-B6
WF 1-B7
WF 1-B8
WF 1-B9
WF 1-B10
ISOLATED VEGETATED WETLAND AREA 1,080 S.F.±

WF 1-C1
WF 1-C2
WF C 1-C3
WF 1-C4
WF 1-C5
WF 1-C6
WF 1-C7
WF 1-C8
ISOLATED VEGETATED WETLAND AREA 1,550 S.F.±

APPROXIMATE LOCATION OF EROSION CONTROL OR WALKING PATH FROM FLOW OF WATER ORIGINATING FROM STORMWATER MAIN "1.02"

APPROXIMATE LOCATION OF STORMWATER MAIN "1.02"

INV=235.2

WOODED AREA
GRASS
FIELD
GRAVEL PATH
STONE WALL
MET BENCH LAID
CONC. BOUND
FOUND
POST
TP 119
TP 120
TP 122
TP 123
TP 124
TP 126
TP 127
TP B-5
TP B-6
TP B-7
TP CL-RD
BORING
3"MH FISKE
RIM 228.5
48" RCP NW
INV 224.5
SEWER MH
RIM 228.9
8" PVC SW
INV 224.9
R=197.86
A l=194.9
BEDRS=19709
R=233.17
R=231.40
A l=228.2
B TH=228.4
R=231.34
R=231.20
R=231.29
TH=228.9
FISKE 40' WIDE
CONC PAD
ENT.=199.77 (SILL MH.?)
ENT.=199.75 (SILL MH.?)
ENT.=199.51 (SILL MH.?)
ENT.=199.75 (SILL MH.?)
ENT.=199.75 (SILL MH.?)

GRAPHIC SCALE
20 10 0 20 40 60
SCALE: 1"=20'

90 Concord Street, Ashland, MA

FLANSBURGH
77 NORTH WASHINGTON STREET
BOSTON, MA 02114-1910
FLANSBURGH.COM

Owner Project Manager

Compass Project Management, Inc.
Owners' Project Manager
One Edgewater Drive, Suite 204
Norwood, MA 02062

Consultants

Nitsch Engineering, Inc.
Land Survey/ Traffic/ Civil Engineers
2 Center Plaza
Boston, MA 02108

Stimson Studio
Landscape Architect
288 Norfolk Street
Cambridge, MA 02139

Engineers Design Group Inc
Structural Engineer
350 Main Street
Malden, MA 02148

Stefura Associates, Inc.
FF&E and Casework
77 North Washington Street
Boston, MA 02114

Crabtree McGrath Associates, Inc.
FF&E and Casework
161 West Main Street
Georgetown, MA 01833

Vanderweil Engineers, LLP
Mechanical Electrical Technology Plumbing & Fire Protection Engineers
274 Summer Street
Boston, MA 02210

Fuss and O'Neill, Inc.
Hazardous Materials
108 Myrtle Street, Suite 502
Quincy, MA 02171

AM Fogarty
Cost Estimators
175 Derby St, Ste 5
Hingham, Massachusetts 02043

No.	Date	Note
		REVISIONS
No.	Date	Note
		ISSUE

Stamp

COMMONWEALTH OF MASSACHUSETTS
MARK E. VIOLETTE #40768
REGISTERED PROFESSIONAL LAND SURVEYOR
Mark Violette
6.11.21

For Permitting Only

Key Plan

NORTH

Sheet Title
Segment A
Existing Conditions

Drawn By: MRD	Project ID: 1914.00
Reviewed By: MEV	Scale: 1"=20'
Issue Date: 06.14.2021	Plot Date: 06.11.2021

Sheet No.
EX4.0

Nitsch Project #19020

DEMOLITION NOTES:

1. SITE PREPARATION AND DEMOLITION SHALL INCLUDE THOSE AREAS WITHIN THE LIMIT OF WORK LINE AS SHOWN ON THE CONTRACT DOCUMENTS.
2. ANY AREA OUTSIDE THE LIMIT OF WORK THAT IS DISTURBED SHALL BE RESTORED TO ITS ORIGINAL CONDITION AT NO ADDITIONAL COST TO THE OWNER.
3. CONSULT ALL OF THE DRAWINGS AND SPECIFICATIONS FOR COORDINATION REQUIREMENTS BEFORE COMMENCING DEMOLITION.
4. THE CONTRACTOR SHALL COORDINATE SITE DEMOLITION EFFORTS WITH ALL TRADES THAT MAY BE AFFECTED BY THE WORK.
5. ALL ITEMS REQUIRING REMOVAL SHALL BE REMOVED TO FULL DEPTH TO INCLUDE BASE MATERIAL AND FOOTINGS OR FOUNDATIONS AS REQUIRED TO FACILITATE CONSTRUCTION, AND LEGALLY DISPOSED OF OFFSITE BY CONTRACTOR.
6. UTILITY PIPES DESIGNATED TO BE ABANDONED IN PLACE SHALL BE PLUGGED AT THEIR ENDS WITH WATERTIGHT BRICK MASONRY OR CEMENT MORTAR WITH A MINIMUM THICKNESS OF 8 INCHES.
7. UTILITY PIPES DESIGNATED TO BE REMOVED SHALL CONSIST OF THE COMPLETE REMOVAL AND DISPOSAL OF THE ENTIRE LENGTH OF PIPE AND BACKFILL AND 95% COMPACTION OF THE VOID WITH ORDINARY BORROW. WHEN THE VOID IS WITHIN THE FOOTPRINT OF THE NEW BUILDING, GRAVEL BORROW SHALL BE USED TO BACKFILL THE VOID.
8. UTILITY STRUCTURES DESIGNATED TO BE ABANDONED IN PLACE SHALL HAVE THEIR CAST IRON CASTINGS REMOVED AND DISPOSED, INLET AND OUTLET PIPES PLUGGED, THE BOTTOM OF THE STRUCTURES SHALL BE BROKEN, THE VOID OF THE STRUCTURES SHALL BE BACKFILLED AND COMPACTED TO 95% WITH ORDINARY BORROW OR FLOWABLE FILL, AND THE TOP OF THE STRUCTURE SHALL BE REMOVED SO THAT IT IS AT LEAST 36 INCHES BELOW FINISH GRADE.
9. UTILITY STRUCTURES DESIGNATED TO BE REMOVED SHALL CONSIST OF THE REMOVAL AND DISPOSAL OF CAST IRON CASTINGS, PLUGGING OF INLET AND OUTLET PIPES, REMOVAL OF THE STRUCTURE, AND BACKFILL AND 95% COMPACTION OF THE VOID WITH ORDINARY BORROW. WHEN HE VOID IS WITHIN THE FOOTPRINT OF THE NEW BUILDING, GRAVEL BORROW SHALL BE USED TO BACKFILL THE VOID.
10. ALL DEBRIS GENERATED DURING SITE PREPARATION ACTIVITIES SHALL BE LEGALLY DISPOSED OF OFFSITE.
11. AT ALL LOCATIONS WHERE EXISTING CURBING, CONCRETE PAVEMENT OR BITUMINOUS CONCRETE ROADWAY ABUTS NEW CONSTRUCTION, THE EDGE OF THE EXISTING CURB OR PAVEMENT SHALL BE SAW CUT TO A CLEAN, SMOOTH EDGE.
12. EXTEND DESIGNATED LIMIT OF WORK AS NECESSARY TO ACCOMPLISH ROUGH GRADING, EROSION CONTROL, TREE PROTECTION, AND SITE WORK AS REQUIRED BY THESE DRAWINGS AND SPECIFICATIONS.
13. THE CONTRACTOR SHALL REMOVE FROM THE SITE ALL RUBBISH AND DEBRIS FOUND THEREON. STORAGE OF SUCH MATERIALS ON THE PROJECT SITE WILL NOT BE PERMITTED. THE CONTRACTOR SHALL LEAVE THE SITE IN SAFE, CLEAN, AND LEVEL CONDITION UPON COMPLETION OF THE SITE DEMOLITION WORK.
14. REMOVE AND STOCKPILE ALL EXISTING SITE LIGHTS, BENCHES, TRASH RECEPTACLES, TRAFFIC SIGNS, GRANITE CURB, AND OTHER SITE IMPROVEMENTS WITHIN LIMIT OF WORK LINE UNLESS OTHERWISE NOTED.
15. ALL EXISTING TREES AND SHRUBS TO REMAIN SHALL BE PROTECTED AND MAINTAINED THROUGHOUT THE TIME OF CONSTRUCTION, AS SPECIFIED AND DIRECTED BY THE LANDSCAPE ARCHITECT.
16. BEFORE ANY TREES OR SHRUBS ARE REMOVED, THE CONTRACTOR SHALL ARRANGE A CONFERENCE ON THE SITE WITH THE OWNER OR OWNER'S REPRESENTATIVE TO IDENTIFY TREES AND SHRUBS THAT ARE TO BE REMOVED, AS WELL AS THOSE WHICH ARE TO BE PROTECTED. DO NOT COMMENCE CLEARING OPERATIONS WITHOUT A CLEAR UNDERSTANDING OF EXISTING CONDITIONS TO BE PRESERVED.
17. THE CONTRACTOR SHALL REMOVE FROM THE AREA OF CONSTRUCTION PAVEMENT, CONCRETE, CURBING, POLES AND FOUNDATIONS, ISLANDS, TREE BERMS AND OTHER FEATURES WITHIN THE LIMITS OF CONSTRUCTION AS REQUIRED TO ACCOMMODATE NEW CONSTRUCTION WHETHER SPECIFIED ON THE DRAWINGS OR NOT.

EROSION AND SEDIMENT CONTROL NOTES:

1. ALL EROSION AND SEDIMENT CONTROL MEASURES SHALL BE CONSTRUCTED AND MAINTAINED IN ACCORDANCE WITH THE LATEST EDITION OF THE "MASSACHUSETTS EROSION AND SEDIMENT CONTROL GUIDELINES FOR URBAN AND SUBURBAN AREAS" PREPARED BY DEPARTMENT OF ENVIRONMENTAL PROTECTION, BUREAU OF RESOURCE PROTECTION, AND THE CURRENT NPDES GENERAL PERMIT FOR STORMWATER DISCHARGES FROM CONSTRUCTION ACTIVITIES.
2. MEANS OF EROSION AND SEDIMENT PROTECTION AS NOTED ON THE DRAWINGS INDICATE MINIMUM RECOMMENDED PROVISIONS. THE CONTRACTOR IS RESPONSIBLE FOR FINAL SELECTION AND PLACEMENT OF EROSION AND SEDIMENTATION CONTROLS BASED ON ACTUAL SITE CONDITIONS AND CONSTRUCTION CONDITIONS. ADDITIONAL MEANS OF PROTECTION SHALL BE PROVIDED BY THE CONTRACTOR AS REQUIRED FOR CONTINUED OR UNFORESEEN EROSION PROBLEMS, OR AS DIRECTED BY CONTROLLING MUNICIPAL AUTHORITIES, AT NO ADDITIONAL EXPENSE TO THE OWNER.
3. AN EROSION CONTROL BARRIER SHALL BE INSTALLED ALONG THE EDGE OF PROPOSED DEVELOPMENT AS INDICATED IN THE PLAN PRIOR TO COMMENCEMENT OF DEMOLITION OR CONSTRUCTION OPERATIONS.
4. SEDIMENT CONTROL MEASURES SHALL BE ADJUSTED TO MEET FIELD CONDITIONS AT THE TIME OF AND DURING ALL PHASES OF CONSTRUCTION AND BE CONSTRUCTED PRIOR TO AND IMMEDIATELY AFTER ANY GRADING OR DISTURBANCE OF EXISTING SURFACE MATERIAL ON THE SITE.
5. AFTER ANY SIGNIFICANT RAINFALL (GREATER THAN 0.25 INCHES OF RAINFALL WITHIN 24 HOURS), SEDIMENT CONTROL STRUCTURES SHALL BE INSPECTED FOR INTEGRITY. ANY DAMAGE SHALL BE CORRECTED IMMEDIATELY.
6. PERIODIC INSPECTION AND MAINTENANCE OF ALL SEDIMENT CONTROL STRUCTURES SHALL BE PROVIDED TO ENSURE THAT THE INTENDED PURPOSE IS ACCOMPLISHED. THE CONTRACTOR SHALL BE RESPONSIBLE FOR ALL SEDIMENT LEAVING THE LIMIT OF WORK. SEDIMENT CONTROL MEASURES SHALL BE IN WORKING CONDITION AT THE END OF EACH WORKING DAY.
7. THE CONTRACTOR SHALL BE RESPONSIBLE FOR PREVENTING SEDIMENT FROM ENTERING ANY STORM DRAINAGE SYSTEM AND FROM BEING CONVEYED TO ANY WETLAND RESOURCE AREA, PUBLIC WAYS, ABUTTING PROPERTY, OR OUTSIDE OF THE PROJECT LIMITS.
8. THE CONTRACTOR SHALL PROTECT ALL DRAINAGE SWALES AND GROUND SURFACES WITHIN THE LIMIT OF WORK FROM EROSIVE CONDITIONS. STRAW BALE, CRUSHED STONE OR EQUIVALENT CHECK DAMS ARE TO BE PROVIDED AT A MAXIMUM OF TWO HUNDRED (200) FOOT SPACING, OR LESS AS SITE-SPECIFIC CONDITIONS WARRANT, WITHIN ALL DRAINAGE SWALES AND DITCHES AND AT UPSTREAM SIDES OF ALL DRAINAGE INLETS.
9. ALL STOCK PILES SHALL BE PROTECTED AND LOCATED A MINIMUM OF 100' FROM EXISTING WETLAND RESOURCE AREAS & WITHIN THE LIMIT OF WORK.
10. ANY SEDIMENT TRACKED ONTO PAVED AREAS SHALL BE SWEPT AT THE END OF EACH WORKING DAY.
11. ALL SEDIMENT RETAINED BY EROSION AND SEDIMENT CONTROL MEASURES SHALL BE LEGALLY DISPOSED OF OFFSITE.
12. TEMPORARY DIVERSION DITCHES, PERMANENT DITCHES, CHANNELS, EMBANKMENTS, AND ANY DENUDED SURFACE THAT WILL BE EXPOSED FOR A PERIOD OF 14 CALENDAR DAYS OR MORE SHALL BE CONSIDERED CRITICAL VEGETATION AREAS. THESE AREAS SHALL BE STABILIZED/PROTECTED WITH APPROPRIATE EROSION CONTROL MATTING OR OTHER EROSION CONTROL METHODS.
13. DUST SHALL BE CONTROLLED BY WATERING OR OTHER APPROVED METHODS AS DIRECTED BY THE PERMITTING AUTHORITY OR OWNER.
14. THE CONTRACTOR SHALL USE TEMPORARY SEEDING, MULCHING, OR OTHER APPROVED STABILIZATION MEASURES TO PROTECT EXPOSED AREAS DURING PROLONGED CONSTRUCTION OR OTHER LAND DISTURBANCE. STOCKPILES THAT WILL BE EXPOSED FOR LONGER THAN 14 DAYS SHALL BE STABILIZED.
15. THE CONTRACTOR IS RESPONSIBLE FOR REMOVAL OF ALL EROSION AND SEDIMENT CONTROLS AT THE COMPLETION OF SITE CONSTRUCTION, BUT ONLY WHEN DIRECTED BY THE TOWN OF ASHLAND CONSERVATION AGENT. STABILIZE OR SEED BARE AREAS LEFT AFTER EROSION CONTROL REMOVAL.

GENERAL NOTES:

1. TOPOGRAPHIC DATA, PROPERTY LINE INFORMATION, AND EXISTING SITE FEATURES WERE OBTAINED FROM A PLAN ENTITLED "PRELIMINARY EXISTING CONDITIONS PLAN", PREPARED BY NITSCH ENGINEERING, DATED NOVEMBER 13, 2019.
2. FLOODPLAIN INFORMATION WAS OBTAINED FROM THE FLOOD INSURANCE RATE MAP (FIRM) NO. 25017C0514F. THE SITE IS IN ZONE X AND ZONE AE.
3. THE CONTRACTOR SHALL COMPLY WITH MASSACHUSETTS GENERAL LAWS CHAPTER 82, SECTION 40, AS AMENDED, WHICH STATES THAT NO ONE MAY EXCAVATE IN THE COMMONWEALTH OF MASSACHUSETTS EXCEPT IN AN EMERGENCY WITHOUT 72 HOURS NOTICE, EXCLUSIVE OF SATURDAYS, SUNDAYS, AND LEGAL HOLIDAYS, TO NATURAL GAS PIPELINE COMPANIES, AND MUNICIPAL UTILITY DEPARTMENTS THAT SUPPLY GAS, ELECTRICITY, TELEPHONE, OR CABLE TELEVISION SERVICE IN OR TO THE CITY OR TOWN WHERE THE EXCAVATION IS TO BE MADE. THE CONTRACTOR SHALL CALL "DIG SAFE" AT 1-888-DIG-SAFE.
4. THE CONTRACTOR SHALL COMPLY WITH MASSACHUSETTS GENERAL LAWS CHAPTER 82A, ALSO REFERRED TO AS JACKIE'S LAW, AS DETAILED IN SECTION 520 CMR 14.00 OF THE CODE OF MASSACHUSETTS REGULATIONS.
5. THE CONTRACTOR SHALL COMPLY WITH ALL APPLICABLE FEDERAL, STATE, AND LOCAL LAWS, RULES, REGULATIONS AND SAFETY CODES IN THE CONSTRUCTION OF ALL IMPROVEMENTS.
6. THE LOCATIONS AND ELEVATIONS OF ALL EXISTING UTILITIES ARE APPROXIMATE AND ALL UTILITIES MAY NOT BE SHOWN. PRESENCE AND LOCATIONS OF ALL UTILITIES WITHIN THE LIMIT OF WORK MUST BE DETERMINED BY THE CONTRACTOR PRIOR TO COMMENCEMENT OF CONSTRUCTION ACTIVITY. THE CONTRACTOR SHALL BE RESPONSIBLE FOR IDENTIFYING AND CONTACTING THE CONTROLLING AUTHORITIES AND/OR UTILITY COMPANIES RELATIVE TO THE LOCATIONS AND ELEVATIONS OF THEIR LINES. THE CONTRACTOR SHALL KEEP A RECORD OF ANY DISCREPANCIES OR CHANGES IN THE LOCATIONS OF ANY UTILITIES SHOWN OR ENCOUNTERED DURING CONSTRUCTION. ANY DISCREPANCIES SHALL BE REPORTED TO THE OWNER AND NITSCH ENGINEERING. ANY DAMAGE RESULTING FROM THE FAILURE OF THE CONTRACTOR TO MAKE THESE DETERMINATIONS AND CONTACTS SHALL BE BORNE BY THE CONTRACTOR.
7. THE CONTRACTOR SHALL, THROUGHOUT CONSTRUCTION, TAKE ADEQUATE PRECAUTIONS TO PROTECT ALL WALKS, GRADING, SIDEWALKS AND SITE DETAILS OUTSIDE OF THE LIMIT OF WORK AS DEFINED ON THE DRAWINGS AND SHALL REPAIR AND REPLACE OR OTHERWISE MAKE GOOD AS DIRECTED BY THE ENGINEER OR OWNER'S DESIGNATED REPRESENTATIVE ANY SUCH OR OTHER DAMAGE SO CAUSED.
8. THE CONTRACTOR SHALL BE SOLELY RESPONSIBLE FOR JOB SITE SAFETY AND ALL CONSTRUCTION MEANS AND METHODS.
9. PRIOR TO BEGINNING CONSTRUCTION, THE CONTRACTOR SHALL BECOME FAMILIAR WITH THE SITE AND CONSTRUCTION DOCUMENTS TO DEVELOP A THOROUGH UNDERSTANDING OF THE PROJECT, INCLUDING ANY SPECIAL CONDITIONS AND CONSTRAINTS.
10. IT IS THE CONTRACTOR'S RESPONSIBILITY TO BECOME FAMILIAR WITH THE PROJECT SITE AND TO VERIFY ALL CONDITIONS IN THE FIELD AND REPORT DISCREPANCIES BETWEEN PLANS AND ACTUAL CONDITIONS TO THE OWNER OR OWNER'S REPRESENTATION IMMEDIATELY.
11. THE CONTRACTOR SHALL CONDUCT ALL NECESSARY CONSTRUCTION NOTIFICATIONS AND APPLY FOR AND OBTAIN ALL NECESSARY CONSTRUCTION PERMITS.
12. THE CONTRACTOR IS SOLELY RESPONSIBLE FOR THE ESTABLISHMENT AND USE OF ALL VERTICAL AND HORIZONTAL CONSTRUCTION CONTROLS.
13. ELEVATIONS REFER TO NAVD88.
14. THE CONTRACTOR SHALL COMPLY WITH THE ORDER OF CONDITIONS DATED XXXX XX, XXXX AND ISSUED BY THE ASHLAND CONSERVATION COMMISSION (DEP #XXX-XXX).
15. FOR SOIL INFORMATION REFER TO GEOTECHNICAL REPORT.

UTILITY NOTES:

1. ALL UTILITY CONNECTIONS ARE SUBJECT TO THE APPROVAL OF, AND GRANTING OF PERMITS BY, THE LOCAL MUNICIPALITY. IT SHALL BE THE SOLE RESPONSIBILITY OF THE CONTRACTOR TO OBTAIN ALL PERMITS AND APPROVALS RELATED TO UTILITY WORK PRIOR TO COMMENCEMENT OF CONSTRUCTION.
2. THE CONTRACTOR SHALL BE SOLELY RESPONSIBLE FOR OBTAINING ALL PERMISSIONS FOR, AND FOR CONDUCTING ALL PREPARATIONS RELATED TO, WORK AFFECTING ANY UTILITIES WITHIN THE JURISDICTION OF ANY NON-MUNICIPAL UTILITY COMPANY, INCLUDING BUT NOT LIMITED TO ELECTRIC, TELEPHONE, AND/OR GAS. THE CONTRACTOR SHALL NOTIFY ALL APPROPRIATE AGENCIES, DEPARTMENTS, AND UTILITY COMPANIES, IN WRITING, AT LEAST 7 DAYS (OR PER UTILITY COMPANY REQUIREMENT) AND NOT MORE THAN 30 DAYS PRIOR TO ANY CONSTRUCTION.
3. THE CONTRACTOR SHALL MAINTAIN UTILITIES SERVICING BUILDINGS AND FACILITIES WITHIN OR OUTSIDE THE PROJECT LIMIT UNLESS THE INTERRUPTION OF SERVICE IS COORDINATED WITH THE OWNER.
4. ALL WATER, SEWER, AND DRAIN WORK SHALL BE PERFORMED ACCORDING TO THE REQUIREMENTS AND STANDARD SPECIFICATIONS OF THE LOCAL MUNICIPALITY.
5. GAS, TELECOMMUNICATIONS AND ELECTRIC SERVICES ARE TO BE DESIGNED BY EACH UTILITY COMPANY IN COORDINATION WITH THE MECHANICAL, ELECTRIC, AND PLUMBING CONSULTANTS.
6. THE CONTRACTOR SHALL COORDINATE CONSTRUCTION ACTIVITIES OF NEW UTILITIES WITH GAS, TELECOMMUNICATION AND ELECTRICAL SERVICES.
7. INSTALL WATER LINES WITH A MINIMUM OF FIVE FEET OF COVER AND A MAXIMUM OF SEVEN FEET COVER FROM THE FINAL DESIGN GRADES.
8. MAINTAIN 10 FEET HORIZONTAL SEPARATION AND 18 INCHES VERTICAL SEPARATION (WATER OVER SEWER) BETWEEN SEWER AND WATER LINES. WHEREVER THERE IS LESS THAN 10 FEET OF HORIZONTAL SEPARATION AND 18 INCHES OF VERTICAL SEPARATION BETWEEN A PROPOSED OR EXISTING SEWER LINE TO REMAIN AND A PROPOSED OR EXISTING WATER LINE TO REMAIN BOTH WATER MAIN AND SEWER MAIN SHALL BE CONSTRUCTED OF MECHANICAL JOINT CEMENT LINED DUCTILE IRON PIPE FOR A DISTANCE OF 10-FEET ON EITHER SIDE OF THE CROSSING. ONE (1) FULL LENGTH OF WATER PIPE SHALL BE CENTERED OVER THE SEWER AT THE CROSSING.
9. THE CONTRACTOR SHALL MAINTAIN ALL EXISTING UTILITIES EXCEPT THOSE NOTED TO BE ABANDONED AND/OR REMOVED & DISPOSED.
10. THE GENERAL CONTRACTOR IS RESPONSIBLE FOR TRENCHING, BACKFILLING, AND SURFACE RESTORATION FOR GAS UTILITY SYSTEMS.
11. ALL ONSITE UTILITIES SHALL BE INSTALLED UNDERGROUND UNLESS OTHERWISE NOTED.
12. ALL EXISTING AND PROPOSED MANHOLE FRAMES, COVERS, VALVES, CLEANOUTS, CASTINGS, ETC. SHALL BE RAISED TO FINISHED GRADE PRIOR TO FINAL GRADING AND PAVING CONSTRUCTION.
13. ALL GRATES IN WALKWAYS SHALL BE ADA COMPLIANT.

PROPOSED LEGEND

Symbol	Description
— · —	LIMIT OF WORK
—//—//—	EXISTING UTILITY TO BE ABANDONED, REMOVED AND DISPOSED IF IN CONFLICT WITH NEW SITE IMPROVEMENTS, OR AS INDICATED ON DRAWINGS
—o—o—	EROSION CONTROL BARRIER
— x — x —	CONSTRUCTION FENCE
— W —	DOMESTIC WATER PIPE
— FP —	FIRE PROTECTION PIPE
— S —	SANITARY SEWER PIPE
— D —	STORM DRAIN PIPE
— G —	GAS PIPE
— E —	ELECTRIC DUCTBANK
— T/C —	TELECOM DUCTBANK
	INLET PROTECTION
- - - -	ELEVATION CONTOURS
	MATCH LINE
	CENTERLINE
CO ●	CLEANOUT
	AREA DRAIN
	ACCESS BASIN
	DRAIN MANHOLE
Q	WATER QUALITY STRUCTURE
	CATCH BASIN
	DOUBLE CATCH BASIN
	WATER QUALITY INLET
	SEWER MANHOLE
TMH	TELECOM MANHOLE
EMH	ELECTRIC MANHOLE
WV	WATER VALVE
HYD	FIRE HYDRANT

ABBREVIATIONS

AB	ACCESS BASIN
AD	AREA DRAIN
BC	BOTTOM OF CURB ELEVATION
CB	CATCH BASIN
CCB	CAPE COD BERM
CI	CAST IRON
CJ	CONTROL JOINT
CL	CENTER LINE
CO	CLEANOUT
COP	CENTER OF PIPE
CP	CARRIER PIPE
CPP	CORRUGATED POLYETHYLENE PIPE
DCB	DOUBLE CATCH BASIN
DI	DUCTILE IRON PIPE CEMENT LINED
DMH	DRAIN MANHOLE
EHH	ELECTRIC HANDHOLE
EJ	EXPANSION JOINT
EMH	ELECTRIC MANHOLE
FD	FOUNDATION DRAIN
FFE	FINISHED FLOOR ELEVATION
HP	HIGH POINT
HYD	FIRE HYDRANT
INV	INVERT ELEVATION
LF	LINEAR FEET
LOW	LIMIT OF WORK
LP	LOW POINT
LW	LAB WASTE
M&P	MAINTAIN AND PROTECT
NIC	NOT IN CONTRACT
OC	ON CENTER
OCS	OUTLET CONTROL STRUCTURE
PD	PERIMETER DRAIN
PERF	PERFORATED
PVC	POLYVINYL CHLORIDE PIPE
R&D	REMOVE AND DISPOSE OF
R&S	REMOVE AND STOCKPILE
RD	ROOF DRAIN
RIM	RIM ELEVATION
SMH	SEWER MANHOLE
SS	SEWER SERVICE
TC	TOP OF CURB ELEVATION
THH	TELECOM HANDHOLE
TMH	TELECOM MANHOLE
TOP	TOP OF PIPE
TOD	TOP OF DUCT BANK
TYP	TYPICAL
UD	UNDERDRAIN
USD	UNDERSLAB DRAIN
VGC	VERTICAL GRANITE CURB
WQI	WATER QUALITY INLET
WQS	WATER QUALITY STRUCTURE
WV	WATER VALVE

ASHLAND, MASSACHUSETTS
Incorporated 1846

90 Concord Street, Ashland, MA

FLANSBURGH
77 NORTH WASHINGTON STREET
BOSTON, MA 02114-1910
FLANSBURGH.COM

Owner Project Manager

Compass Project Management, Inc.
Owners' Project Manager
One Edgewater Drive, Suite 204
Norwood, MA 02062

Consultants

Nitsch Engineering, Inc.
Land Survey/ Traffic/ Civil Engineers
2 Center Plaza
Boston, MA 02108

Stimson Studio
Landscape Architect
288 Norfolk Street
Cambridge, MA 02139

Engineers Design Group Inc
Structural Engineer
350 Main Street
Malden, MA 02148

Stefura Associates, Inc.
FF&E and Casework
77 North Washington Street
Boston, MA 02114

Crabtree McGrath Associates, Inc.
FF&E and Casework
161 West Main Street
Georgetown, MA 01833

Vanderweil Engineers, LLP
Mechanical Electrical Technology Plumbing & Fire Protection Engineers
274 Summer Street
Boston, MA 02210

Fuss and O'Neill, Inc.
Hazardous Materials
108 Myrtle Street, Suite 502
Quincy, MA 02171

AM Fogarty
Cost Estimators
175 Derby St, Ste 5
Hingham, Massachusetts 02043

No.	Date	Note

REVISIONS

No.	Date	Note

ISSUE

Stamp

NITSCH PROJECT #13609
COMMONWEALTH OF MASSACHUSETTS
JARED E. GENTILUCCI
CIVIL
No. 48079
REGISTERED PROFESSIONAL ENGINEER
6/11/21

For Permitting Only

Key Plan

NORTH

Sheet Title
Segment A
Civil Notes, Legends and Abbreviations

Drawn By	Project ID
NJB	1914.00
Reviewed By	**Scale**
BMV/JEG	NOT TO SCALE
Issue Date	**Plot Date**
06.14.2021	06.11.2021

Sheet No.

C1.0

Nitsch Project #13609

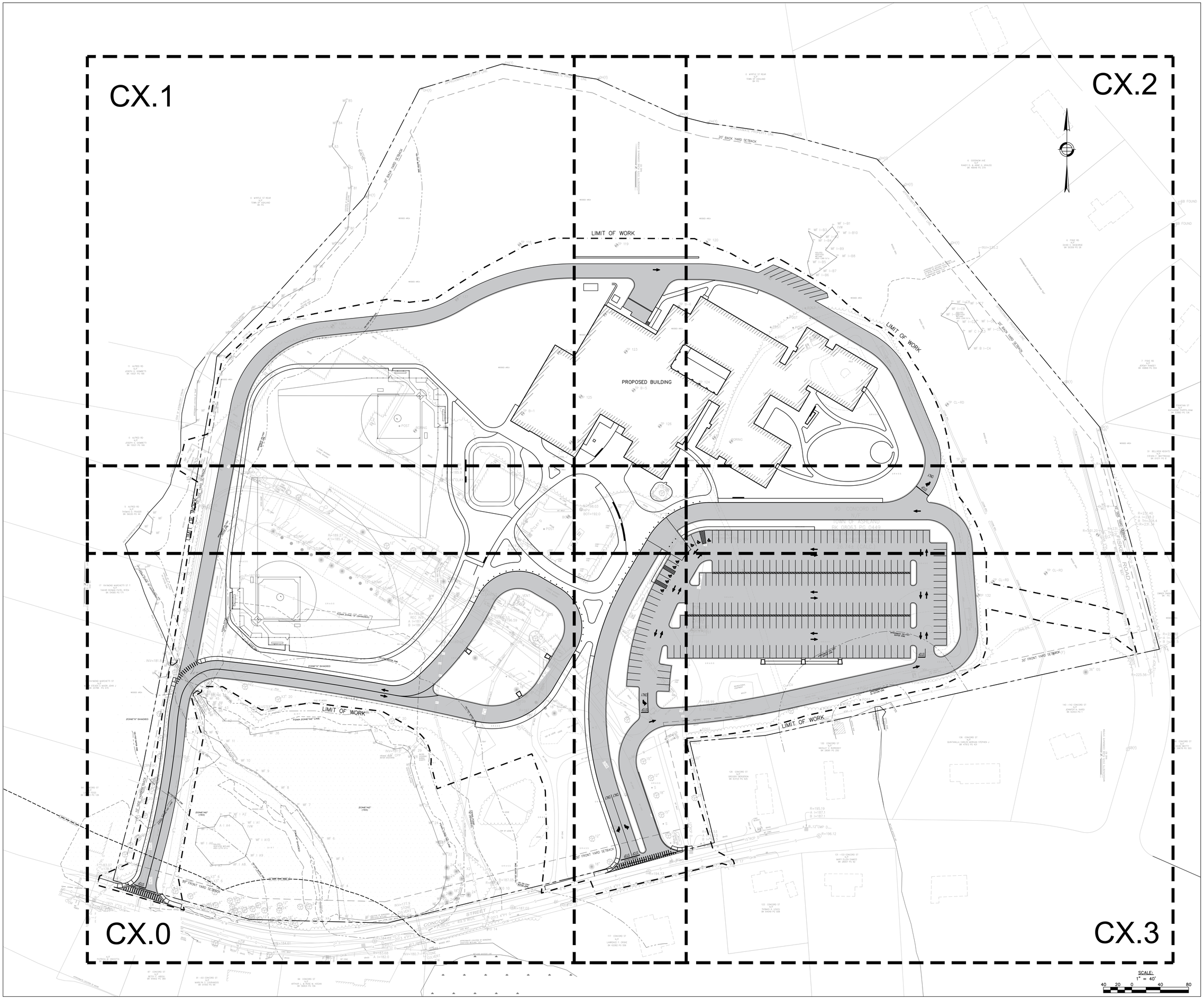

90 Concord Street, Ashland, MA

FLANSBURGH

77 NORTH WASHINGTON STREET
BOSTON, MA 02114-1910
FLANSBURGH.COM

Owner Project Manager

Compass Project Management, Inc.
Owners' Project Manager
One Edgewater Drive, Suite 204
Norwood, MA 02062

Consultants

Nitsch Engineering, Inc.
Land Survey/ Traffic/ Civil Engineers
2 Center Plaza
Boston, MA 02108

Stimson Studio
Landscape Architect
288 Norfolk Street
Cambridge, MA 02139

Engineers Design Group Inc
Structural Engineer
350 Main Street
Malden, MA 02148

Stefura Associates, Inc.
FF&E and Casework
77 North Washington Street
Boston, MA 02114

Crabtree McGrath Associates, Inc.
FF&E and Casework
161 West Main Street
Georgetown, MA 01833

Vanderweil Engineers, LLP
Mechanical Electrical Technology Plumbing & Fire Protection Engineers
274 Summer Street
Boston, MA 02210

Fuss and O'Neill, Inc.
Hazardous Materials
108 Myrtle Street, Suite 502
Quincy, MA 02171

AM Fogarty
Cost Estimators
175 Derby St, Ste 5
Hingham, Massachusetts 02043

No.	Date	Note

REVISIONS

No.	Date	Note

ISSUE

Stamp

NITSCH PROJECT #13609

COMMONWEALTH OF MASSACHUSETTS
JAMES E. DIGENTILUCCI
CIVIL
No. 48079
REGISTERED PROFESSIONAL ENGINEER
6/11/21

For Permitting Only

Key Plan

NORTH

Sheet Title

Segment A

Overall Site Plan

Drawn By	Project ID
NJB	1914.00
Reviewed By	Scale
BMV/JEG	1" = 40'
Issue Date	Plot Date
06.14.2021	06.11.2021

Sheet No.

C1.1

Nitsch Project #13609



ALL PROPOSED DRAINAGE INLET STRUCTURES SHALL BE PROVIDED WITH INLET PROTECTION ONCE INSTALLED

90 Concord Street, Ashland, MA

FLANSBURGH

77 NORTH WASHINGTON STREET
BOSTON, MA 02114-1910
FLANSBURGH.COM

Owner Project Manager

Compass Project Management, Inc.
Owners' Project Manager
One Edgewater Drive, Suite 204
Norwood, MA 02062

Consultants

Nitsch Engineering, Inc.
Land Survey/ Traffic/ Civil Engineers
2 Center Plaza
Boston, MA 02108

Stimson Studio
Landscape Architect
288 Norfolk Street
Cambridge, MA 02139

Engineers Design Group Inc
Structural Engineer
350 Main Street
Malden, MA 02148

Stefura Associates, Inc.
FF&E and Casework
77 North Washington Street
Boston, MA 02114

Crabtree McGrath Associates, Inc.
FF&E and Casework
161 West Main Street
Georgetown, MA 01833

Vanderweil Engineers, LLP
Mechanical Electrical Technology Plumbing & Fire Protection Engineers
274 Summer Street
Boston, MA 02210

Fuss and O'Neill, Inc.
Hazardous Materials
108 Myrtle Street, Suite 502
Quincy, MA 02171

AM Fogarty
Cost Estimators
175 Derby St, Ste 5
Hingham, Massachusetts 02043

No.	Date	Note
REVISIONS		

No.	Date	Note
ISSUE		

Stamp

NITSCH PROJECT #13609

COMMONWEALTH OF MASSACHUSETTS
CIVIL
No. 48079
REGISTERED PROFESSIONAL ENGINEER
6/11/21

For Permitting Only

Key Plan

NORTH

Sheet Title

Segment A

Erosion and Sedimentation Control Plan

Drawn By: NJB	Project ID: 1914.00
Reviewed By: BMV/JEG	Scale: 1" = 20'
Issue Date: 06.14.2021	Plot Date: 06.11.2021

Sheet No.

C2.0

Nitsch Project #13609



ASHLAND, MASSACHUSETTS
Incorporated 1846

90 Concord Street, Ashland, MA

FLANSBURGH

77 NORTH WASHINGTON STREET
BOSTON, MA 02114-1910

FLANSBURGH.COM

Owner Project Manager

Compass Project Management, Inc.
Owners' Project Manager
One Edgewater Drive, Suite 204
Norwood, MA 02062

Consultants

Nitsch Engineering, Inc.
Land Survey/ Traffic/ Civil Engineers
2 Center Plaza
Boston, MA 02108

Stimson Studio
Landscape Architect
288 Norfolk Street
Cambridge, MA 02139

Engineers Design Group Inc
Structural Engineer
350 Main Street
Malden, MA 02148

Stefura Associates, Inc.
FF&E and Casework
77 North Washington Street
Boston, MA 02114

Crabtree McGrath Associates, Inc.
FF&E and Casework
161 West Main Street
Georgetown, MA 01833

Vanderweil Engineers, LLP
Mechanical Electrical Technology Plumbing & Fire Protection Engineers
274 Summer Street
Boston, MA 02210

Fuss and O'Neill, Inc.
Hazardous Materials
108 Myrtle Street, Suite 502
Quincy, MA 02171

AM Fogarty
Cost Estimators
175 Derby St, Ste 5
Hingham, Massachusetts 02043

No.	Date	Note
REVISIONS		

No.	Date	Note
ISSUE		

Stamp

NITSCH PROJECT #13609

JAMES E. GENTILUCCI
CIVIL
No. 48079
REGISTERED PROFESSIONAL ENGINEER
COMMONWEALTH OF MASSACHUSETTS
6/11/21

For Permitting Only

Key Plan

NORTH

Sheet Title

Segment A

Erosion and Sedimentation Control Plan

Drawn By: NJB	Project ID: 1914.00
Reviewed By: BMV/JEG	Scale: 1" = 20'
Issue Date: 06.14.2021	Plot Date: 06.11.2021

Sheet No.

C2.1

Nitsch Project #13609



ALL PROPOSED DRAINAGE INLET STRUCTURES SHALL BE PROVIDED WITH INLET PROTECTION ONCE INSTALLED

90 Concord Street, Ashland, MA

FLANSBURGH

77 NORTH WASHINGTON STREET
BOSTON, MA 02114-1910
FLANSBURGH.COM

Owner Project Manager

Compass Project Management, Inc.
Owners' Project Manager
One Edgewater Drive, Suite 204
Norwood, MA 02062

Consultants

Nitsch Engineering, Inc.
Land Survey/ Traffic/ Civil Engineers
2 Center Plaza
Boston, MA 02108

Stimson Studio
Landscape Architect
288 Norfolk Street
Cambridge, MA 02139

Engineers Design Group Inc
Structural Engineer
350 Main Street
Malden, MA 02148

Stefura Associates, Inc.
FF&E and Casework
77 North Washington Street
Boston, MA 02114

Crabtree McGrath Associates, Inc.
FF&E and Casework
161 West Main Street
Georgetown, MA 01833

Vanderweil Engineers, LLP
Mechanical Electrical Technology Plumbing & Fire Protection Engineers
274 Summer Street
Boston, MA 02210

Fuss and O'Neill, Inc.
Hazardous Materials
108 Myrtle Street, Suite 502
Quincy, MA 02171

AM Fogarty
Cost Estimators
175 Derby St, Ste 5
Hingham, Massachusetts 02043

No.	Date	Note
REVISIONS		
No.	Date	Note
ISSUE		

Stamp

NITSCH PROJECT #13609
COMMONWEALTH OF MASSACHUSETTS
JAMES E. PIZZANTILUCCI
CIVIL
No. 48079
REGISTERED PROFESSIONAL ENGINEER
6/11/21

For Permitting Only

Key Plan

NORTH

Sheet Title

Segment A

Erosion and Sedimentation Control Plan

Drawn By	Project ID
NJB	1914.00
Reviewed By	Scale
BMV/JEG	1" = 20'
Issue Date	Plot Date
06.14.2021	06.11.2021

Sheet No.

C2.2

Nitsch Project #13609



SITE EROSION CONTROL LEGEND

STEEP SLOPE PROTECTION

ALL PROPOSED DRAINAGE INLET STRUCTURES SHALL BE PROVIDED WITH INLET PROTECTION ONCE INSTALLED

SCALE: 1" = 20'

20 10 0 20 40

90 Concord Street, Ashland, MA

FLANSBURGH

77 NORTH WASHINGTON STREET
BOSTON, MA 02114-1910
FLANSBURGH.COM

Owner Project Manager

Compass Project Management, Inc.
Owners' Project Manager
One Edgewater Drive, Suite 204
Norwood, MA 02062

Consultants

Nitsch Engineering, Inc.
Land Survey/ Traffic/ Civil Engineers
2 Center Plaza
Boston, MA 02108

Stimson Studio
Landscape Architect
288 Norfolk Street
Cambridge, MA 02139

Engineers Design Group Inc
Structural Engineer
350 Main Street
Malden, MA 02148

Stefura Associates, Inc.
FF&E and Casework
77 North Washington Street
Boston, MA 02114

Crabtree McGrath Associates, Inc.
FF&E and Casework
161 West Main Street
Georgetown, MA 01833

Vanderweil Engineers, LLP
Mechanical Electrical Technology Plumbing & Fire Protection Engineers
274 Summer Street
Boston, MA 02210

Fuss and O'Neill, Inc.
Hazardous Materials
108 Myrtle Street, Suite 502
Quincy, MA 02171

AM Fogarty
Cost Estimators
175 Derby St, Ste 5
Hingham, Massachusetts 02043

No.	Date	Note
REVISIONS		

No.	Date	Note
ISSUE		

Stamp

NITSCH PROJECT #13609

For Permitting Only

Key Plan

NORTH

Sheet Title

Segment A

Erosion and Sedimentation Control Plan

Drawn By NJB	Project ID 1914.00
Reviewed By BMV/JEG	Scale 1" = 20'
Issue Date 06.14.2021	Plot Date 06.11.2021

Sheet No.

C2.3

Nitsch Project #13609



90 Concord Street, Ashland, MA

FLANSBURGH

77 NORTH WASHINGTON STREET
BOSTON, MA 02114-1910
FLANSBURGH.COM

Owner Project Manager

Compass Project Management, Inc.
Owners' Project Manager
One Edgewater Drive, Suite 204
Norwood, MA 02062

Consultants

Nitsch Engineering, Inc.
Land Survey/ Traffic/ Civil Engineers
2 Center Plaza
Boston, MA 02108

Stimson Studio
Landscape Architect
288 Norfolk Street
Cambridge, MA 02139

Engineers Design Group Inc
Structural Engineer
350 Main Street
Malden, MA 02148

Stefura Associates, Inc.
FF&E and Casework
77 North Washington Street
Boston, MA 02114

Crabtree McGrath Associates, Inc.
FF&E and Casework
161 West Main Street
Georgetown, MA 01833

Vanderweil Engineers, LLP
Mechanical Electrical Technology Plumbing & Fire Protection Engineers
274 Summer Street
Boston, MA 02210

Fuss and O'Neill, Inc.
Hazardous Materials
108 Myrtle Street, Suite 502
Quincy, MA 02171

AM Fogarty
Cost Estimators
175 Derby St, Ste 5
Hingham, Massachusetts 02043

No.	Date	Note
REVISIONS		

No.	Date	Note
ISSUE		

Stamp

NITSCH PROJECT #13609

For Permitting Only

Key Plan

Sheet Title

Segment A

Site Demolition Plan

Drawn By	Project ID
NJB	13609
Reviewed By	Scale
BMV/JEG	1" = 20'
Issue Date	Plot Date
06.14.2021	06.11.2021

Sheet No.

C3.0



90 Concord Street, Ashland, MA

FLANSBURGH

77 NORTH WASHINGTON STREET
BOSTON, MA 02114-1910
FLANSBURGH.COM

Owner Project Manager

Compass Project Management, Inc.
Owners' Project Manager
One Edgewater Drive, Suite 204
Norwood, MA 02062

Consultants

Nitsch Engineering, Inc.
Land Survey/ Traffic/ Civil Engineers
2 Center Plaza
Boston, MA 02108

Stimson Studio
Landscape Architect
288 Norfolk Street
Cambridge, MA 02139

Engineers Design Group Inc
Structural Engineer
350 Main Street
Malden, MA 02148

Stefura Associates, Inc.
FF&E and Casework
77 North Washington Street
Boston, MA 02114

Crabtree McGrath Associates, Inc.
FF&E and Casework
161 West Main Street
Georgetown, MA 01833

Vanderweil Engineers, LLP
Mechanical Electrical Technology Plumbing & Fire Protection Engineers
274 Summer Street
Boston, MA 02210

Fuss and O'Neill, Inc.
Hazardous Materials
108 Myrtle Street, Suite 502
Quincy, MA 02171

AM Fogarty
Cost Estimators
175 Derby St, Ste 5
Hingham, Massachusetts 02043

No.	Date	Note
REVISIONS		

No.	Date	Note
ISSUE		

Stamp

NITSCH PROJECT #13609

COMMONWEALTH OF MASSACHUSETTS
JAMES E. FOSCANTILUCCI
CIVIL
No. 48079
REGISTERED PROFESSIONAL ENGINEER
6/11/21

For Permitting Only

Key Plan

NORTH

Sheet Title

Segment A

Site Demolition Plan

Drawn By	Project ID
NJB	1914.00
Reviewed By	Scale
BMV/JEG	1" = 20'
Issue Date	Plot Date
06.14.2021	06.11.2021

Sheet No.

C3.1

Nitsch Project #13609



ASHLAND, MASSACHUSETTS
Incorporated 1846

90 Concord Street, Ashland, MA

FLANSBURGH

77 NORTH WASHINGTON STREET
BOSTON, MA 02114-1910

FLANSBURGH.COM

Owner Project Manager

Compass Project Management, Inc.
Owners' Project Manager
One Edgewater Drive, Suite 204
Norwood, MA 02062

Consultants

Nitsch Engineering, Inc.
Land Survey/ Traffic/ Civil Engineers
2 Center Plaza
Boston, MA 02108

Stimson Studio
Landscape Architect
288 Norfolk Street
Cambridge, MA 02139

Engineers Design Group Inc
Structural Engineer
350 Main Street
Malden, MA 02148

Stefura Associates, Inc.
FF&E and Casework
77 North Washington Street
Boston, MA 02114

Crabtree McGrath Associates, Inc.
FF&E and Casework
161 West Main Street
Georgetown, MA 01833

Vanderweil Engineers, LLP
Mechanical Electrical Technology
Plumbing & Fire Protection Engineers
274 Summer Street
Boston, MA 02210

Fuss and O'Neill, Inc.
Hazardous Materials
108 Myrtle Street, Suite 502
Quincy, MA 02171

AM Fogarty
Cost Estimators
175 Derby St, Ste 5
Hingham, Massachusetts 02043

No.	Date	Note
REVISIONS		
No.	Date	Note
ISSUE		

Stamp

NITSCH PROJECT #13609

COMMONWEALTH OF MASSACHUSETTS
JAMES E. MATTLOCH
CIVIL
No. 48079
REGISTERED PROFESSIONAL ENGINEER
9/1/21

For Permitting Only

Key Plan

NORTH

Sheet Title

Segment A

Site Preparation Plan

Drawn By: NJB	Project ID: 1914.00
Reviewed By: BMV/JEG	Scale: 1" = 20'
Issue Date: 06.14.2021	Plot Date: 06.11.2021

Sheet No.

C3.2

Nitsch Project #13609

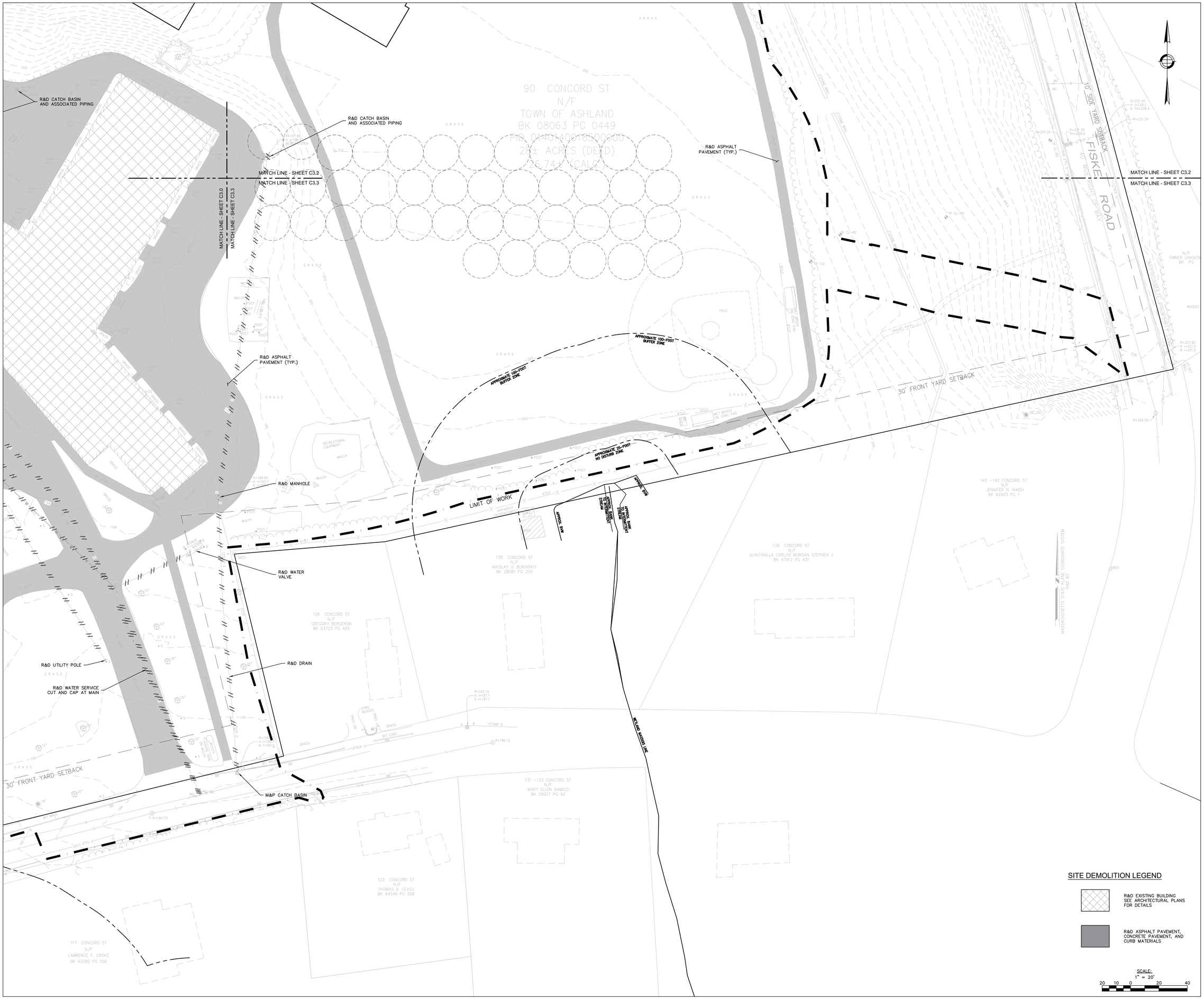

SITE DEMOLITION LEGEND

R&D EXISTING BUILDING SEE ARCHITECTURAL PLANS FOR DETAILS

R&D ASPHALT PAVEMENT, CONCRETE PAVEMENT, AND CURB MATERIALS

SCALE:
1" = 20'
20 10 0 20 40

ASHLAND, MASSACHUSETTS
Incorporated 1846

90 Concord Street, Ashland, MA

FLANSBURGH

77 NORTH WASHINGTON STREET
BOSTON, MA 02114-1910

FLANSBURGH.COM

Owner Project Manager

Compass Project Management, Inc.
Owners' Project Manager
One Edgewater Drive, Suite 204
Norwood, MA 02062

Consultants

Nitsch Engineering, Inc.
Land Survey/ Traffic/ Civil Engineers
2 Center Plaza
Boston, MA 02108

Stimson Studio
Landscape Architect
288 Norfolk Street
Cambridge, MA 02139

Engineers Design Group Inc
Structural Engineer
350 Main Street
Malden, MA 02148

Stefura Associates, Inc.
FF&E and Casework
77 North Washington Street
Boston, MA 02114

Crabtree McGrath Associates, Inc.
FF&E and Casework
161 West Main Street
Georgetown, MA 01833

Vanderweil Engineers, LLP
Mechanical Electrical Technology
Plumbing & Fire Protection Engineers
274 Summer Street
Boston, MA 02210

Fuss and O'Neill, Inc.
Hazardous Materials
108 Myrtle Street, Suite 502
Quincy, MA 02171

AM Fogarty
Cost Estimators
175 Derby St, Ste 5
Hingham, Massachusetts 02043

No.	Date	Note
REVISIONS		

No.	Date	Note
ISSUE		

Stamp

NITSCH PROJECT #13609

DAVID E. PANTILUCCI
CIVIL
No. 48079
REGISTERED PROFESSIONAL ENGINEER
COMMONWEALTH OF MASSACHUSETTS
6/11/21

For Permitting Only

Key Plan

NORTH

Sheet Title

Segment A

Site Demolition Plan

Drawn By: NJB	Project ID: 1914.00
Reviewed By: BMV/JEG	Scale: 1" = 20'
Issue Date: 06.14.2021	Plot Date: 06.11.2021

Sheet No.

C3.3

Nitsch Project #13609



ASHLAND, MASSACHUSETTS Incorporated 1846

90 Concord Street, Ashland, MA

FLANSBURGH

77 NORTH WASHINGTON STREET
BOSTON, MA 02114-1910
FLANSBURGH.COM

Owner Project Manager

Compass Project Management, Inc.
Owners' Project Manager
One Edgewater Drive, Suite 204
Norwood, MA 02062

Consultants

Nitsch Engineering, Inc.
Land Survey/ Traffic/ Civil Engineers
2 Center Plaza
Boston, MA 02108

Stimson Studio
Landscape Architect
288 Norfolk Street
Cambridge, MA 02139

Engineers Design Group Inc
Structural Engineer
350 Main Street
Malden, MA 02148

Stefura Associates, Inc.
FF&E and Casework
77 North Washington Street
Boston, MA 02114

Crabtree McGrath Associates, Inc.
FF&E and Casework
161 West Main Street
Georgetown, MA 01833

Vanderweil Engineers, LLP
Mechanical Electrical Technology Plumbing & Fire Protection Engineers
274 Summer Street
Boston, MA 02210

Fuss and O'Neill, Inc.
Hazardous Materials
108 Myrtle Street, Suite 502
Quincy, MA 02171

AM Fogarty
Cost Estimators
175 Derby St, Ste 5
Hingham, Massachusetts 02043

No.	Date	Note
		REVISIONS

No.	Date	Note
		ISSUE

Stamp

NITSCH PROJECT #13609
JAMES E. CANTILUCCI CIVIL No. 48079 REGISTERED PROFESSIONAL ENGINEER
COMMONWEALTH OF MASSACHUSETTS
06/11/21

For Permitting Only

Key Plan

NORTH

Sheet Title

Segment A
Roadway Layout and Materials Plan

Drawn By: NJB	Project ID: 1914.00
Reviewed By: BMV/JEG	Scale: 1" = 20'
Issue Date: 06.14.2021	Plot Date: 06.11.2021

Sheet No.

C4.0

Nitsch Project #13609



90 Concord Street, Ashland, MA

FLANSBURGH

77 NORTH WASHINGTON STREET
BOSTON, MA 02114-1910

FLANSBURGH.COM

Owner Project Manager

Compass Project Management, Inc.
Owners' Project Manager
One Edgewater Drive, Suite 204
Norwood, MA 02062

Consultants

Nitsch Engineering, Inc.
Land Survey/ Traffic/ Civil Engineers
2 Center Plaza
Boston, MA 02108

Stimson Studio
Landscape Architect
288 Norfolk Street
Cambridge, MA 02139

Engineers Design Group Inc
Structural Engineer
350 Main Street
Malden, MA 02148

Stefura Associates, Inc.
FF&E and Casework
77 North Washington Street
Boston, MA 02114

Crabtree McGrath Associates, Inc.
FF&E and Casework
161 West Main Street
Georgetown, MA 01833

Vanderweil Engineers, LLP
Mechanical Electrical Technology Plumbing & Fire Protection Engineers
274 Summer Street
Boston, MA 02210

Fuss and O'Neill, Inc.
Hazardous Materials
108 Myrtle Street, Suite 502
Quincy, MA 02171

AM Fogarty
Cost Estimators
175 Derby St, Ste 5
Hingham, Massachusetts 02043

No.	Date	Note
REVISIONS		
No.	Date	Note
ISSUE		

Stamp

NITSCH PROJECT #13609

COMMONWEALTH OF MASSACHUSETTS
ALFRED E. DISANTILUCCI
CIVIL
No. 48079
REGISTERED PROFESSIONAL ENGINEER
6/11/21

For Permitting Only

Key Plan

NORTH

Sheet Title

Segment A
Roadway Layout and Materials Plan

Drawn By NJB	Project ID 1914.00
Reviewed By BMV/JEG	Scale 1" = 20'
Issue Date 06.14.2021	Plot Date 06.11.2021

Sheet No.

C4.1

Nitsch Project #13609

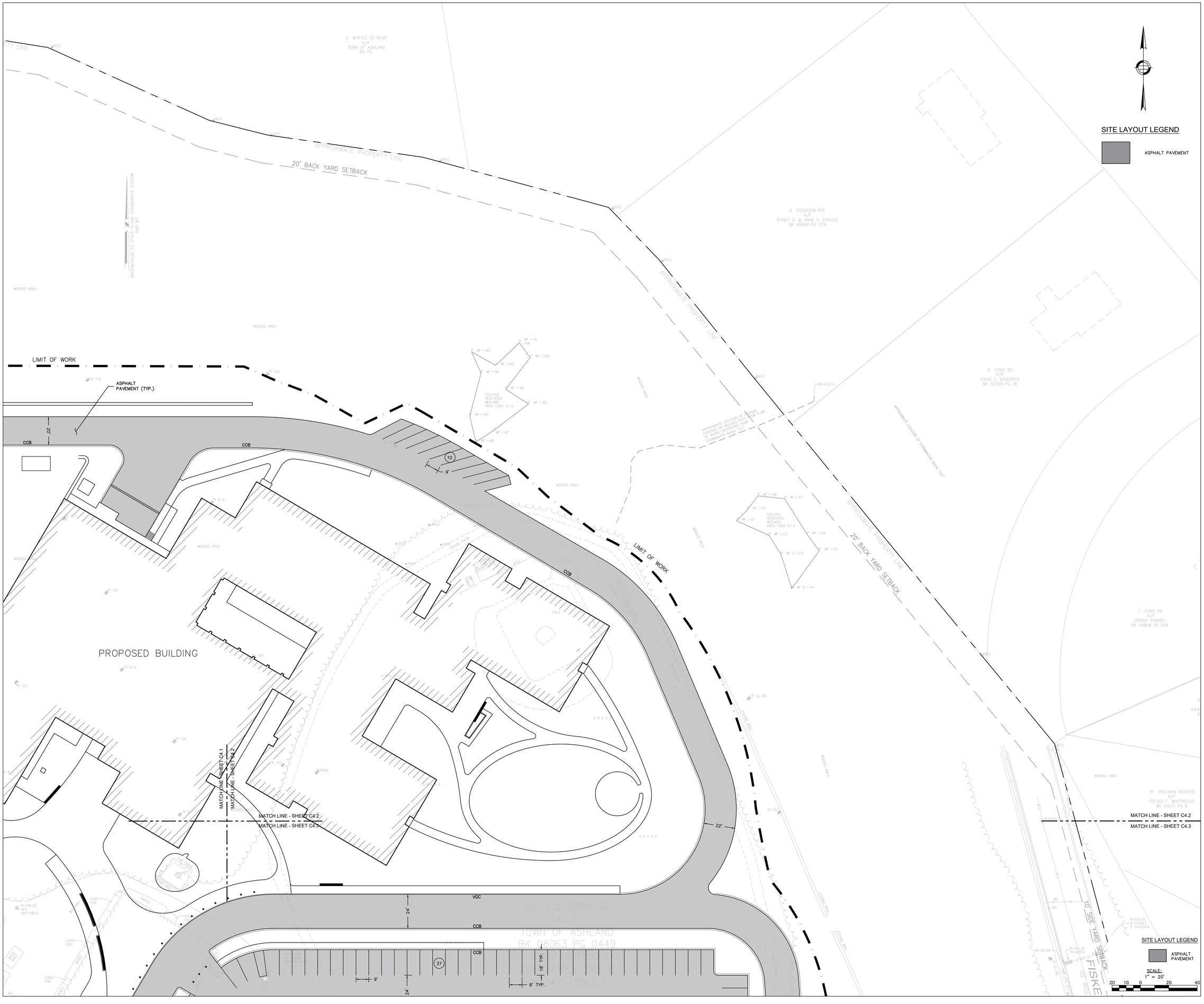

90 Concord Street, Ashland, MA

FLANSBURGH

77 NORTH WASHINGTON STREET
BOSTON, MA 02114-1910
FLANSBURGH.COM

Owner Project Manager

Compass Project Management, Inc.
Owners' Project Manager
One Edgewater Drive, Suite 204
Norwood, MA 02062

Consultants

Nitsch Engineering, Inc.
Land Survey/ Traffic/ Civil Engineers
2 Center Plaza
Boston, MA 02108

Stimson Studio
Landscape Architect
288 Norfolk Street
Cambridge, MA 02139

Engineers Design Group Inc
Structural Engineer
350 Main Street
Malden, MA 02148

Stefura Associates, Inc.
FF&E and Casework
77 North Washington Street
Boston, MA 02114

Crabtree McGrath Associates, Inc.
FF&E and Casework
161 West Main Street
Georgetown, MA 01833

Vanderweil Engineers, LLP
Mechanical Electrical Technology Plumbing & Fire Protection Engineers
274 Summer Street
Boston, MA 02210

Fuss and O'Neill, Inc.
Hazardous Materials
108 Myrtle Street, Suite 502
Quincy, MA 02171

AM Fogarty
Cost Estimators
175 Derby St, Ste 5
Hingham, Massachusetts 02043

No.	Date	Note
REVISIONS		
No.	Date	Note
ISSUE		

Stamp

NITSCH PROJECT #13609

COMMONWEALTH OF MASSACHUSETTS
JAMES E. FOSCANTILUCCI
CIVIL
No. 48079
REGISTERED PROFESSIONAL ENGINEER
6/11/21

For Permitting Only

Key Plan

NORTH

Sheet Title

Segment A
Roadway Layout and Materials Plan

Drawn By	Project ID
	1914.00
Reviewed By	Scale
NJB	
Issue Date	Plot Date
08/04/2023	06/11/2021

Sheet No.

C4.2

Nitsch Project #13609

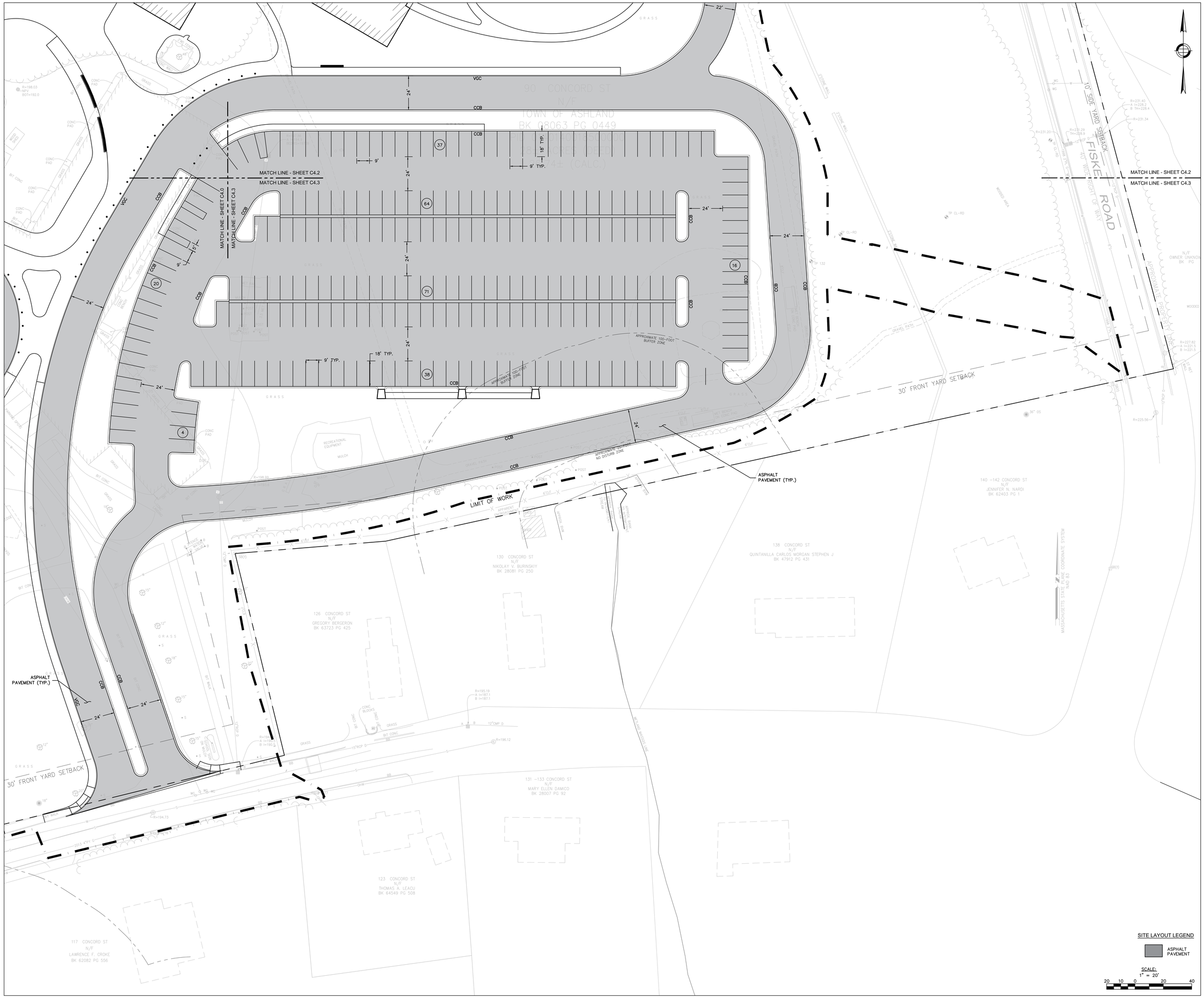

90 Concord Street, Ashland, MA

FLANSBURGH

77 NORTH WASHINGTON STREET
BOSTON, MA 02114-1910
FLANSBURGH.COM

Owner Project Manager

Compass Project Management, Inc.
Owners' Project Manager
One Edgewater Drive, Suite 204
Norwood, MA 02062

Consultants

Nitsch Engineering, Inc.
Land Survey/ Traffic/ Civil Engineers
2 Center Plaza
Boston, MA 02108

Stimson Studio
Landscape Architect
288 Norfolk Street
Cambridge, MA 02139

Engineers Design Group Inc
Structural Engineer
350 Main Street
Malden, MA 02148

Stefura Associates, Inc.
FF&E and Casework
77 North Washington Street
Boston, MA 02114

Crabtree McGrath Associates, Inc.
FF&E and Casework
161 West Main Street
Georgetown, MA 01833

Vanderweil Engineers, LLP
Mechanical Electrical Technology Plumbing & Fire Protection Engineers
274 Summer Street
Boston, MA 02210

Fuss and O'Neill, Inc.
Hazardous Materials
108 Myrtle Street, Suite 502
Quincy, MA 02171

AM Fogarty
Cost Estimators
175 Derby St, Ste 5
Hingham, Massachusetts 02043

No.	Date	Note
REVISIONS		
No.	Date	Note
ISSUE		

Stamp

NITSCH PROJECT #13609

COMMONWEALTH OF MASSACHUSETTS
JAMES E. FORSTELLICO
CIVIL
No. 48079
REGISTERED PROFESSIONAL ENGINEER
6/11/21

For Permitting Only

Key Plan

NORTH

Sheet Title

Segment A

Roadway Layout and Materials Plan

Drawn By NJB	Project ID 1914.00
Reviewed By BMV/JEG	Scale 1" = 20'
Issue Date 06.14.2021	Plot Date 06.11.2021

Sheet No.

C4.3

Nitsch Project #13609



90 Concord Street, Ashland, MA

FLANSBURGH

77 NORTH WASHINGTON STREET
BOSTON, MA 02114-1910
FLANSBURGH.COM

Owner Project Manager

Compass Project Management, Inc.
Owners' Project Manager
One Edgewater Drive, Suite 204
Norwood, MA 02062

Consultants

Nitsch Engineering, Inc.
Land Survey/ Traffic/ Civil Engineers
2 Center Plaza
Boston, MA 02108

Stimson Studio
Landscape Architect
288 Norfolk Street
Cambridge, MA 02139

Engineers Design Group Inc
Structural Engineer
350 Main Street
Malden, MA 02148

Stefura Associates, Inc.
FF&E and Casework
77 North Washington Street
Boston, MA 02114

Crabtree McGrath Associates, Inc.
FF&E and Casework
161 West Main Street
Georgetown, MA 01833

Vanderweil Engineers, LLP
Mechanical Electrical Technology Plumbing & Fire Protection Engineers
274 Summer Street
Boston, MA 02210

Fuss and O'Neill, Inc.
Hazardous Materials
108 Myrtle Street, Suite 502
Quincy, MA 02171

AM Fogarty
Cost Estimators
175 Derby St, Ste 5
Hingham, Massachusetts 02043

No.	Date	Note
REVISIONS		
No.	Date	Note
ISSUE		

Stamp

NITSCH PROJECT #13609

COMMONWEALTH OF MASSACHUSETTS
JAMES E. FOGARTILUCCI
CIVIL
No. 48079
REGISTERED PROFESSIONAL ENGINEER
6/11/21

For Permitting Only

Key Plan

NORTH

Sheet Title

Segment A

Signage and Striping Plan

Drawn By	Project ID
NJB	1914.00
Reviewed By	Scale
BMV/JEG	1" = 20'
Issue Date	Plot Date
06.14.2021	06.11.2021

Sheet No.

C5.0

Nitsch Project #13609



90 Concord Street, Ashland, MA

FLANSBURGH

77 NORTH WASHINGTON STREET
BOSTON, MA 02114-1910
FLANSBURGH.COM

Owner Project Manager

Compass Project Management, Inc.
Owners' Project Manager
One Edgewater Drive, Suite 204
Norwood, MA 02062

Consultants

Nitsch Engineering, Inc.
Land Survey/ Traffic/ Civil Engineers
2 Center Plaza
Boston, MA 02108

Stimson Studio
Landscape Architect
288 Norfolk Street
Cambridge, MA 02139

Engineers Design Group Inc
Structural Engineer
350 Main Street
Malden, MA 02148

Stefura Associates, Inc.
FF&E and Casework
77 North Washington Street
Boston, MA 02114

Crabtree McGrath Associates, Inc.
FF&E and Casework
161 West Main Street
Georgetown, MA 01833

Vanderweil Engineers, LLP
Mechanical Electrical Technology Plumbing & Fire Protection Engineers
274 Summer Street
Boston, MA 02210

Fuss and O'Neill, Inc.
Hazardous Materials
108 Myrtle Street, Suite 502
Quincy, MA 02171

AM Fogarty
Cost Estimators
175 Derby St, Ste 5
Hingham, Massachusetts 02043

No.	Date	Note
REVISIONS		

No.	Date	Note
ISSUE		

Stamp

NITSCH PROJECT #13609

COMMONWEALTH OF MASSACHUSETTS
JAMES E. CONTRUCCI
CIVIL
No. 48079
REGISTERED PROFESSIONAL ENGINEER
6/11/21

For Permitting Only

Key Plan

NORTH

Sheet Title

Segment A

Signage and Striping Plan

Drawn By	Project ID
NJB	1914.00
Reviewed By	Scale
BMV/JEG	1" = 20'
Issue Date	Plot Date
06.14.2021	06.11.2021

Sheet No.

C5.1

Nitsch Project #13609

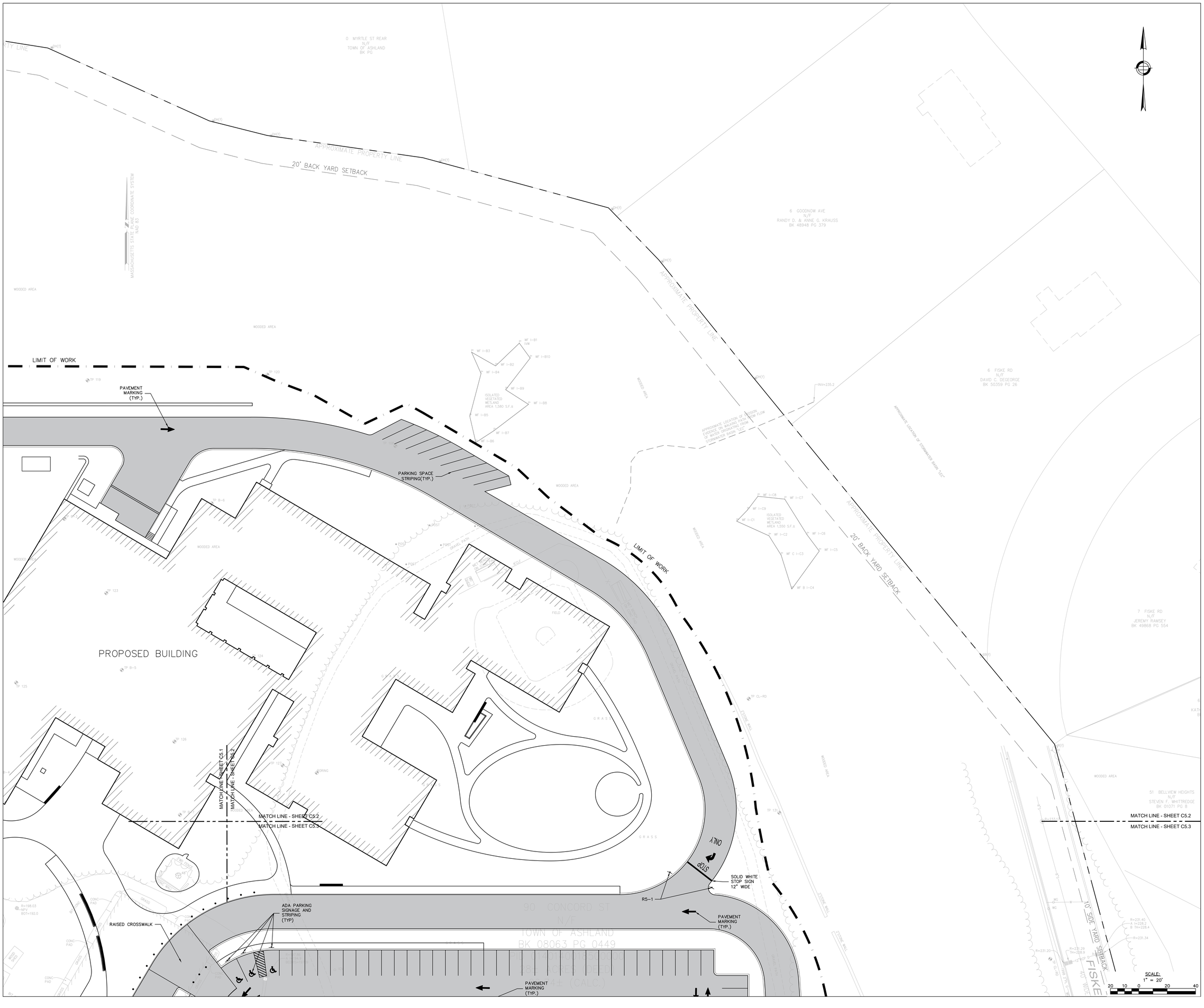

90 Concord Street, Ashland, MA

FLANSBURGH

77 NORTH WASHINGTON STREET
BOSTON, MA 02114-1910
FLANSBURGH.COM

Owner Project Manager

Compass Project Management, Inc.
Owners' Project Manager
One Edgewater Drive, Suite 204
Norwood, MA 02062

Consultants

Nitsch Engineering, Inc.
Land Survey/ Traffic/ Civil Engineers
2 Center Plaza
Boston, MA 02108

Stimson Studio
Landscape Architect
288 Norfolk Street
Cambridge, MA 02139

Engineers Design Group Inc
Structural Engineer
350 Main Street
Malden, MA 02148

Stefura Associates, Inc.
FF&E and Casework
77 North Washington Street
Boston, MA 02114

Crabtree McGrath Associates, Inc.
FF&E and Casework
161 West Main Street
Georgetown, MA 01833

Vanderweil Engineers, LLP
Mechanical Electrical Technology Plumbing & Fire Protection Engineers
274 Summer Street
Boston, MA 02210

Fuss and O'Neill, Inc.
Hazardous Materials
108 Myrtle Street, Suite 502
Quincy, MA 02171

AM Fogarty
Cost Estimators
175 Derby St, Ste 5
Hingham, Massachusetts 02043

No.	Date	Note
REVISIONS		
No.	Date	Note
ISSUE		

Stamp

NITSCH PROJECT #13609

COMMONWEALTH OF MASSACHUSETTS
JARED E. DOSANTILUCCI
CIVIL
No. 48079
REGISTERED PROFESSIONAL ENGINEER
6/11/21

For Permitting Only

Key Plan

NORTH

Sheet Title

Segment A

Signage and Striping Plan

Drawn By NJB	Project ID 1914.00
Reviewed By BMV/JEG	Scale 1" = 20'
Issue Date 06.14.2021	Plot Date 06.11.2021

Sheet No.

C5.2

Nitsch Project #13609

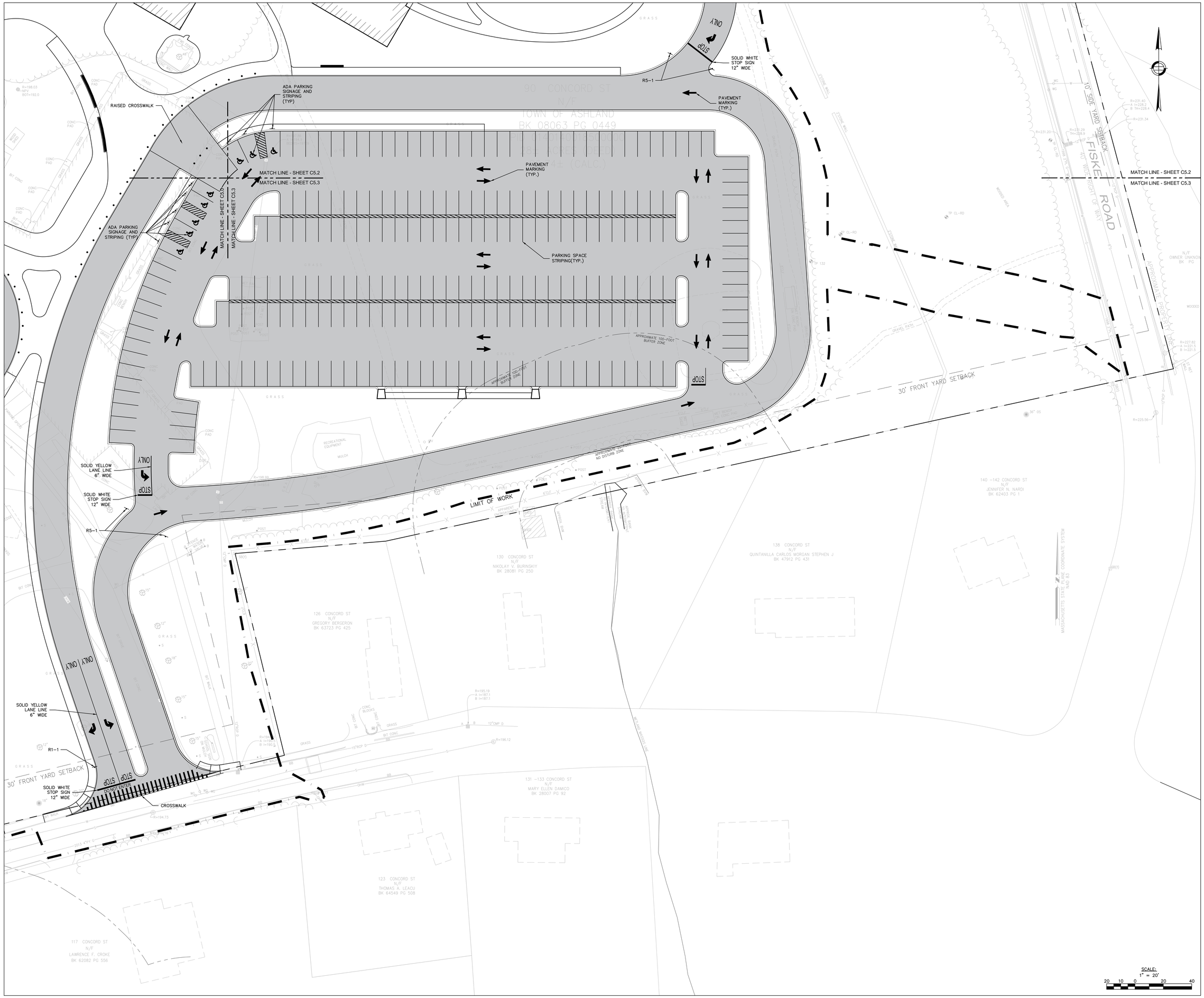

90 Concord Street, Ashland, MA

FLANSBURGH

77 NORTH WASHINGTON STREET
BOSTON, MA 02114-1910
FLANSBURGH.COM

Owner Project Manager

Compass Project Management, Inc.
Owners' Project Manager
One Edgewater Drive, Suite 204
Norwood, MA 02062

Consultants

Nitsch Engineering, Inc.
Land Survey/ Traffic/ Civil Engineers
2 Center Plaza
Boston, MA 02108

Stimson Studio
Landscape Architect
288 Norfolk Street
Cambridge, MA 02139

Engineers Design Group Inc
Structural Engineer
350 Main Street
Malden, MA 02148

Stefura Associates, Inc.
FF&E and Casework
77 North Washington Street
Boston, MA 02114

Crabtree McGrath Associates, Inc.
FF&E and Casework
161 West Main Street
Georgetown, MA 01833

Vanderweil Engineers, LLP
Mechanical Electrical Technology Plumbing & Fire Protection Engineers
274 Summer Street
Boston, MA 02210

Fuss and O'Neill, Inc.
Hazardous Materials
108 Myrtle Street, Suite 502
Quincy, MA 02171

AM Fogarty
Cost Estimators
175 Derby St, Ste 5
Hingham, Massachusetts 02043

No.	Date	Note
REVISIONS		
No.	Date	Note
ISSUE		

Stamp

NITSCH PROJECT #13609

COMMONWEALTH OF MASSACHUSETTS
JAMES E. CONTILUCCI
CIVIL
No. 48079
REGISTERED PROFESSIONAL ENGINEER
6/11/21

For Permitting Only

Key Plan

NORTH

Sheet Title

Segment A

Signage and Striping Plan

Drawn By	Project ID
NJB	1914.00
Reviewed By	Scale
BMV/JEG	1" = 20'
Issue Date	Plot Date
06.14.2021	06.11.2021

Sheet No.

C5.3

Nitsch Project #13609

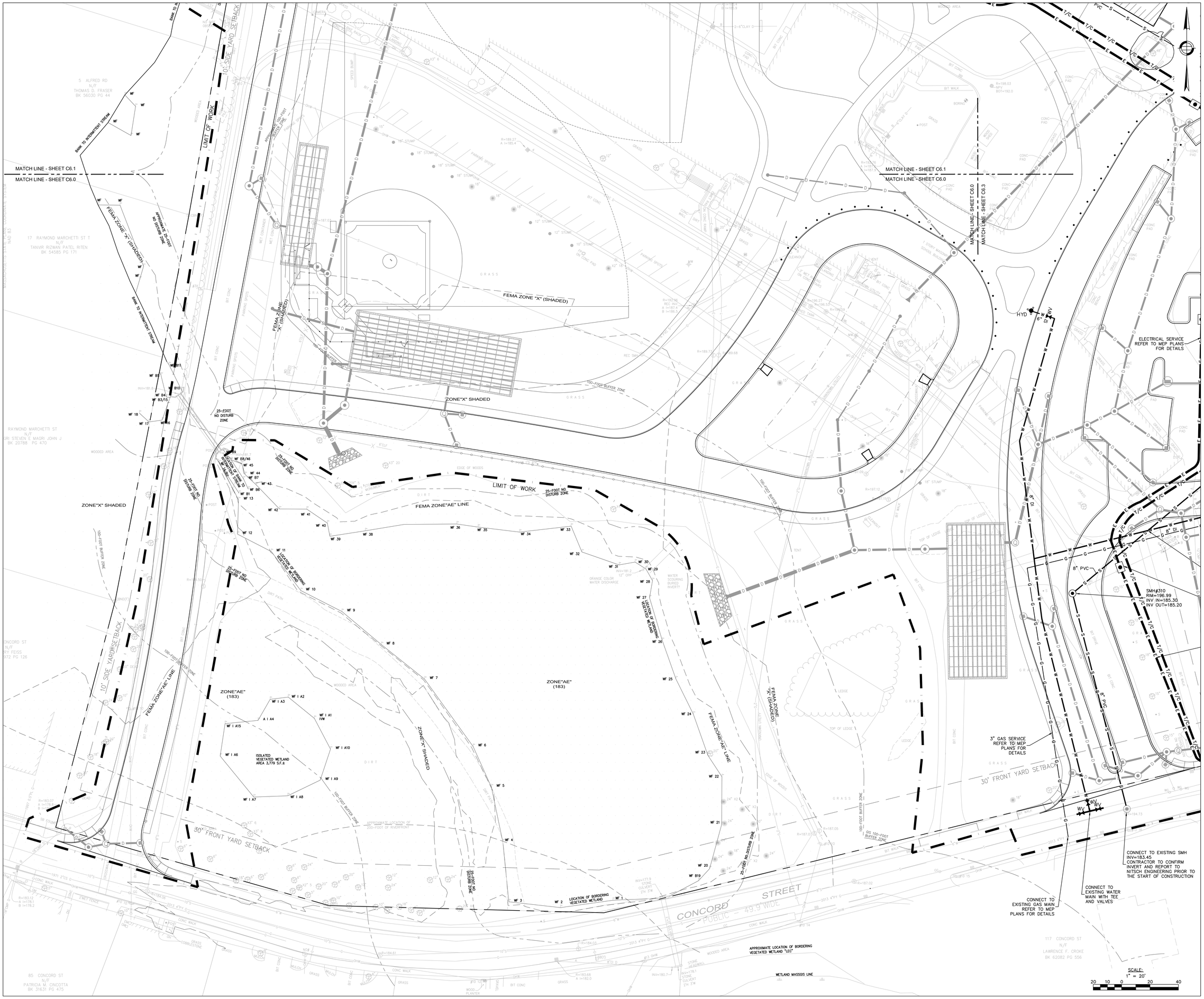

90 Concord Street, Ashland, MA

FLANSBURGH

77 NORTH WASHINGTON STREET
BOSTON, MA 02114-1910
FLANSBURGH.COM

Owner Project Manager

Compass Project Management, Inc.
Owners' Project Manager
One Edgewater Drive, Suite 204
Norwood, MA 02062

Consultants

Nitsch Engineering, Inc.
Land Survey/ Traffic/ Civil Engineers
2 Center Plaza
Boston, MA 02108

Stimson Studio
Landscape Architect
288 Norfolk Street
Cambridge, MA 02139

Engineers Design Group Inc
Structural Engineer
350 Main Street
Malden, MA 02148

Stefura Associates, Inc.
FF&E and Casework
77 North Washington Street
Boston, MA 02114

Crabtree McGrath Associates, Inc.
FF&E and Casework
161 West Main Street
Georgetown, MA 01833

Vanderweil Engineers, LLP
Mechanical Electrical Technology Plumbing & Fire Protection Engineers
274 Summer Street
Boston, MA 02210

Fuss and O'Neill, Inc.
Hazardous Materials
108 Myrtle Street, Suite 502
Quincy, MA 02171

AM Fogarty
Cost Estimators
175 Derby St, Ste 5
Hingham, Massachusetts 02043

No.	Date	Note
REVISIONS		

No.	Date	Note
ISSUE		

Stamp

NITSCH PROJECT #13609
COMMONWEALTH OF MASSACHUSETTS
JAMES E. FLORENTINO
CIVIL
No. 48079
REGISTERED PROFESSIONAL ENGINEER
6/11/21

For Permitting Only

Key Plan

NORTH

Sheet Title

Segment A

Site Utility Plan

Drawn By NJB	Project ID 1914.00
Reviewed By BMV/JEG	Scale 1" = 20'
Issue Date 06.14.2021	Plot Date 06.11.2021

Sheet No.

C6.0

Nitsch Project #13609



90 Concord Street, Ashland, MA

FLANSBURGH

77 NORTH WASHINGTON STREET
BOSTON, MA 02114-1910

FLANSBURGH.COM

Owner Project Manager

Compass Project Management, Inc.
Owners' Project Manager
One Edgewater Drive, Suite 204
Norwood, MA 02062

Consultants

Nitsch Engineering, Inc.
Land Survey/ Traffic/ Civil Engineers
2 Center Plaza
Boston, MA 02108

Stimson Studio
Landscape Architect
288 Norfolk Street
Cambridge, MA 02139

Engineers Design Group Inc
Structural Engineer
350 Main Street
Malden, MA 02148

Stefura Associates, Inc.
FF&E and Casework
77 North Washington Street
Boston, MA 02114

Crabtree McGrath Associates, Inc.
FF&E and Casework
161 West Main Street
Georgetown, MA 01833

Vanderweil Engineers, LLP
Mechanical Electrical Technology Plumbing & Fire Protection Engineers
274 Summer Street
Boston, MA 02210

Fuss and O'Neill, Inc.
Hazardous Materials
108 Myrtle Street, Suite 502
Quincy, MA 02171

AM Fogarty
Cost Estimators
175 Derby St, Ste 5
Hingham, Massachusetts 02043

No.	Date	Note
		REVISIONS

No.	Date	Note
		ISSUE

Stamp

NITSCH PROJECT #13609

COMMONWEALTH OF MASSACHUSETTS
JAMES E. GENTILUCCI
CIVIL
No. 48079
REGISTERED PROFESSIONAL ENGINEER
4/1/21

For Permitting Only

Key Plan

NORTH

Sheet Title

Segment A

Site Utility Plan

Drawn By: NJB	Project ID: 1914.00
Reviewed By: BMV/JEG	Scale: 1" = 20'
Issue Date: 06.14.2021	Plot Date: 06.11.2021

Sheet No.

C6.1

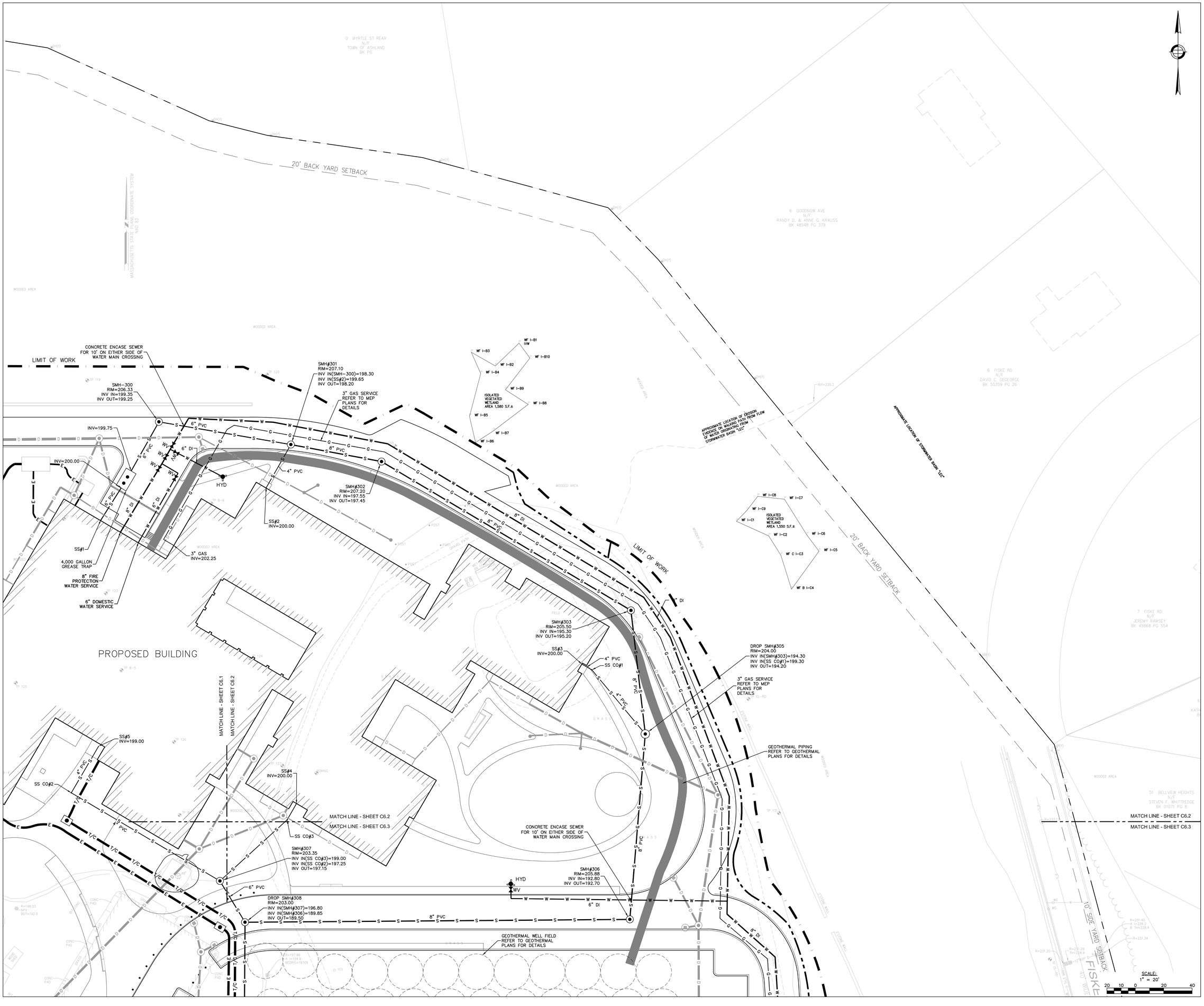

90 Concord Street, Ashland, MA

FLANSBURGH

77 NORTH WASHINGTON STREET
BOSTON, MA 02114-1910
FLANSBURGH.COM

Owner Project Manager

Compass Project Management, Inc.
Owners' Project Manager
One Edgewater Drive, Suite 204
Norwood, MA 02062

Consultants

Nitsch Engineering, Inc.
Land Survey/ Traffic/ Civil Engineers
2 Center Plaza
Boston, MA 02108

Stimson Studio
Landscape Architect
288 Norfolk Street
Cambridge, MA 02139

Engineers Design Group Inc
Structural Engineer
350 Main Street
Malden, MA 02148

Stefura Associates, Inc.
FF&E and Casework
77 North Washington Street
Boston, MA 02114

Crabtree McGrath Associates, Inc.
FF&E and Casework
161 West Main Street
Georgetown, MA 01833

Vanderweil Engineers, LLP
Mechanical Electrical Technology Plumbing & Fire Protection Engineers
274 Summer Street
Boston, MA 02210

Fuss and O'Neill, Inc.
Hazardous Materials
108 Myrtle Street, Suite 502
Quincy, MA 02171

AM Fogarty
Cost Estimators
175 Derby St, Ste 5
Hingham, Massachusetts 02043

No.	Date	Note
REVISIONS		

No.	Date	Note
ISSUE		

Stamp

NITSCH PROJECT #13609
COMMONWEALTH OF MASSACHUSETTS
JAMES E. PONTILUCCI
CIVIL
No. 48079
REGISTERED PROFESSIONAL ENGINEER
6/11/21

For Permitting Only

Key Plan

NORTH

Sheet Title

Segment A

Site Utility Plan

Drawn By NJB	Project ID 1914.00
Reviewed By BMV/JEG	Scale 1" = 20'
Issue Date 06.14.2021	Plot Date 06.11.2021
Sheet No.	

C6.2

Nitsch Project #13609

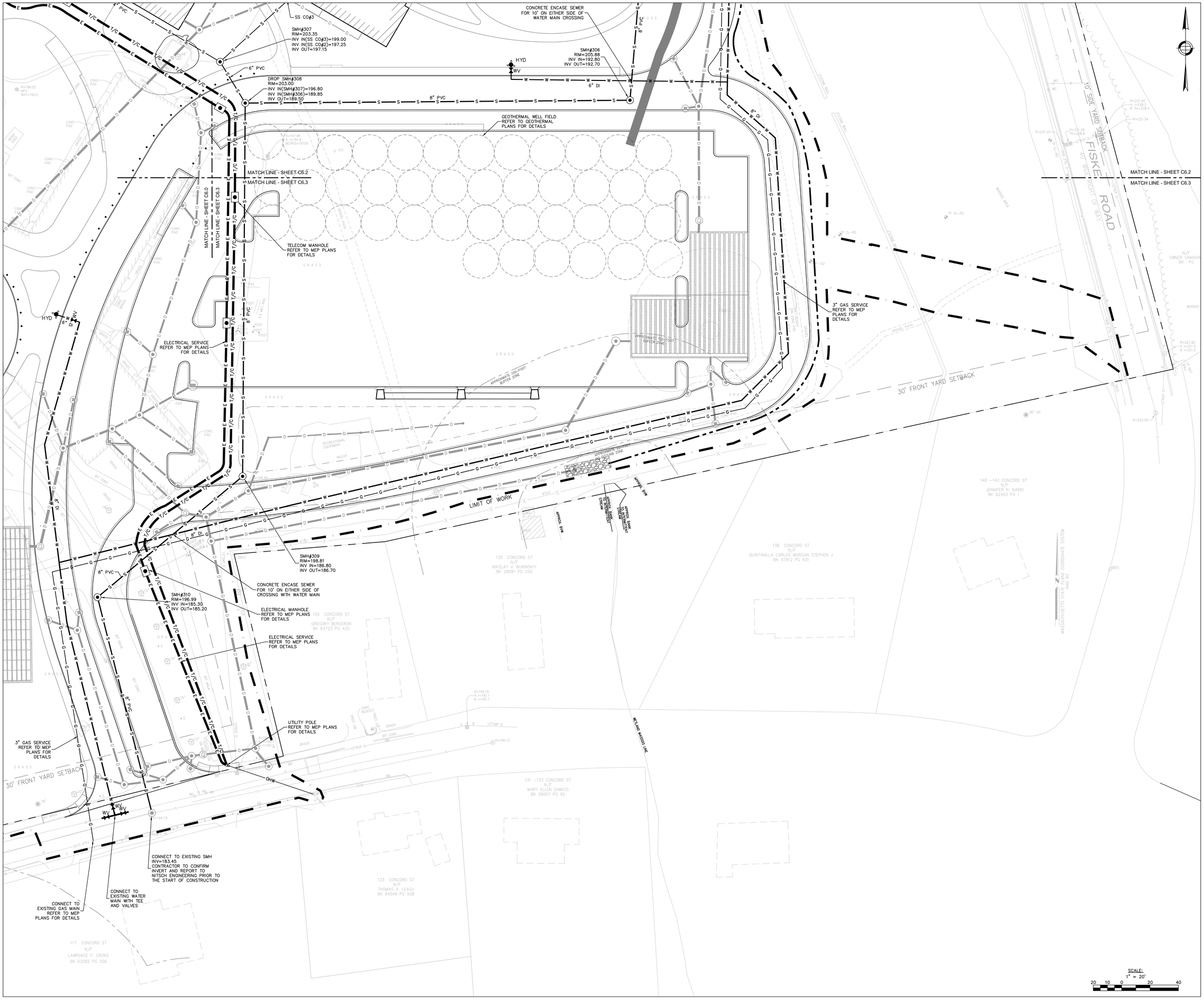

90 Concord Street, Ashland, MA

FLANSBURGH

77 NORTH WASHINGTON STREET
BOSTON, MA 02114-1910
FLANSBURGH.COM

Owner Project Manager

Compass Project Management, Inc.
Owners' Project Manager
One Edgewater Drive, Suite 204
Norwood, MA 02062

Consultants

Nitsch Engineering, Inc.
Land Survey/ Traffic/ Civil Engineers
2 Center Plaza
Boston, MA 02108

Stimson Studio
Landscape Architect
288 Norfolk Street
Cambridge, MA 02139

Engineers Design Group Inc
Structural Engineer
350 Main Street
Malden, MA 02148

Stefura Associates, Inc.
FF&E and Casework
77 North Washington Street
Boston, MA 02114

Crabtree McGrath Associates, Inc.
FF&E and Casework
161 West Main Street
Georgetown, MA 01833

Vanderweil Engineers, LLP
Mechanical Electrical Technology Plumbing & Fire Protection Engineers
274 Summer Street
Boston, MA 02210

Fuss and O'Neill, Inc.
Hazardous Materials
108 Myrtle Street, Suite 502
Quincy, MA 02171

AM Fogarty
Cost Estimators
175 Derby St, Ste 5
Hingham, Massachusetts 02043

No.	Date	Note
REVISIONS		

No.	Date	Note
ISSUE		

Stamp

NITSCH PROJECT #13609

COMMONWEALTH OF MASSACHUSETTS
JARED E. DIGENTILUCCI
CIVIL
No. 48079
REGISTERED PROFESSIONAL ENGINEER
6/11/21

For Permitting Only

Key Plan

NORTH

Sheet Title

Segment A

Site Utility Plan

Drawn By	Project ID
NJB	1914.00
Reviewed By	Scale
BMV/JEG	1" = 20'
Issue Date	Plot Date
06.14.2021	06.11.2021

Sheet No.

C6.3

Nitsch Project #13609

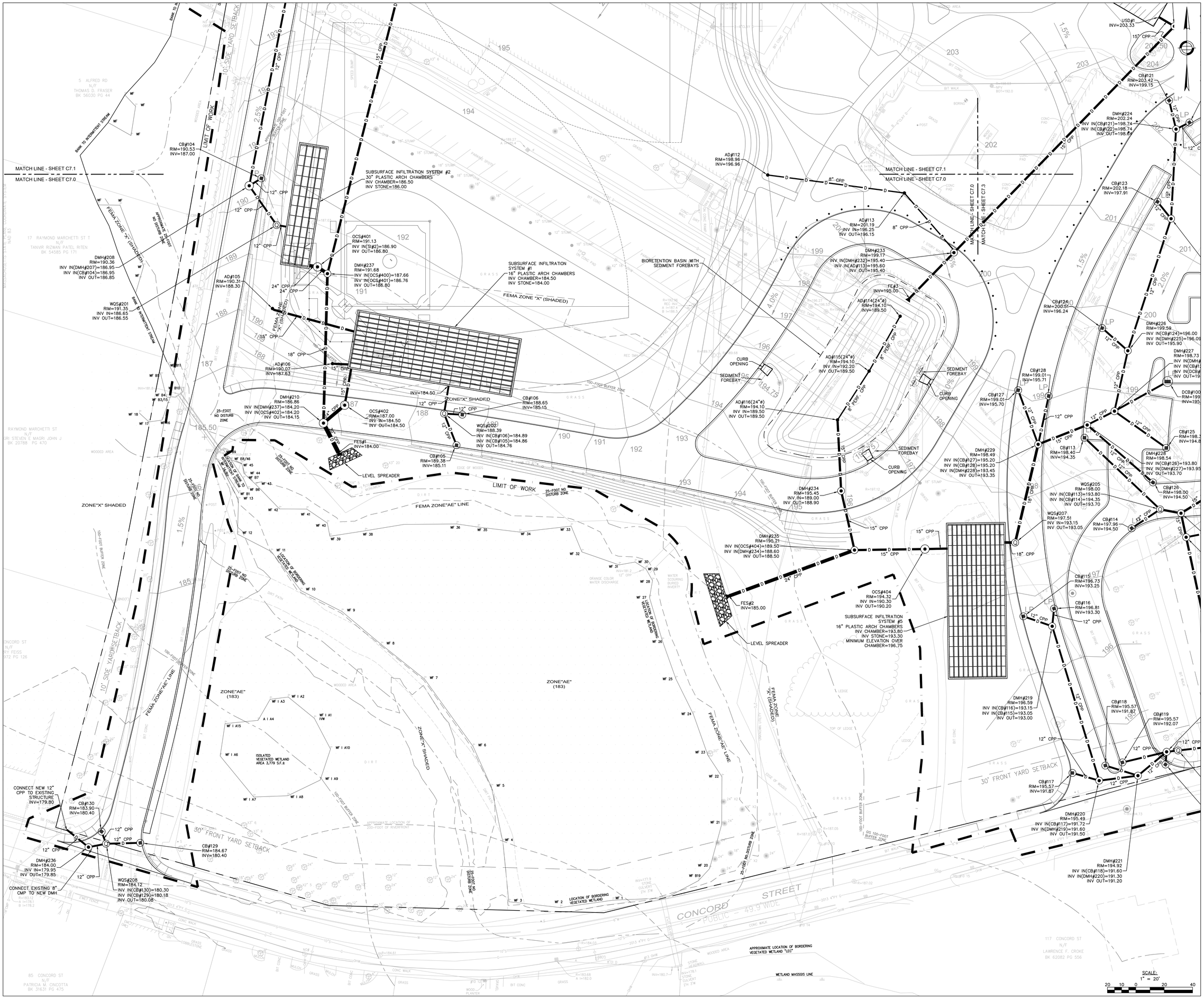

90 Concord Street, Ashland, MA

FLANSBURGH

77 NORTH WASHINGTON STREET
BOSTON, MA 02114-1910
FLANSBURGH.COM

Owner Project Manager

Compass Project Management, Inc.
Owners' Project Manager
One Edgewater Drive, Suite 204
Norwood, MA 02062

Consultants

Nitsch Engineering, Inc.
Land Survey/ Traffic/ Civil Engineers
2 Center Plaza
Boston, MA 02108

Stimson Studio
Landscape Architect
288 Norfolk Street
Cambridge, MA 02139

Engineers Design Group Inc
Structural Engineer
350 Main Street
Malden, MA 02148

Stefura Associates, Inc.
FF&E and Casework
77 North Washington Street
Boston, MA 02114

Crabtree McGrath Associates, Inc.
FF&E and Casework
161 West Main Street
Georgetown, MA 01833

Vanderweil Engineers, LLP
Mechanical Electrical Technology Plumbing & Fire Protection Engineers
274 Summer Street
Boston, MA 02210

Fuss and O'Neill, Inc.
Hazardous Materials
108 Myrtle Street, Suite 502
Quincy, MA 02171

AM Fogarty
Cost Estimators
175 Derby St, Ste 5
Hingham, Massachusetts 02043

No.	Date	Note
REVISIONS		

No.	Date	Note
ISSUE		

Stamp

NITSCH PROJECT #13609

COMMONWEALTH OF MASSACHUSETTS
ALFRED E. CASTILLUCCI
CIVIL
No. 48079
REGISTERED PROFESSIONAL ENGINEER
6/11/21

For Permitting Only

Key Plan

NORTH

Sheet Title

Segment A

Site Drainage Plan

Drawn By	Project ID
NJB	1914.00
Reviewed By	Scale
BMV/JEG	1" = 20'
Issue Date	Plot Date
06.14.2021	06.11.2021

Sheet No.

C7.0

Nitsch Project #13609

ASHLAND, MASSACHUSETTS
Incorporated 1846
90 Concord Street, Ashland, MA

FLANSBURGH
77 NORTH WASHINGTON STREET
BOSTON, MA 02114-1910
FLANSBURGH.COM

Owner Project Manager

Compass Project Management, Inc.
Owners' Project Manager
One Edgewater Drive, Suite 204
Norwood, MA 02062

Consultants

Nitsch Engineering, Inc.
Land Survey/ Traffic/ Civil Engineers
2 Center Plaza
Boston, MA 02108

Stimson Studio
Landscape Architect
288 Norfolk Street
Cambridge, MA 02139

Engineers Design Group Inc
Structural Engineer
350 Main Street
Malden, MA 02148

Stefura Associates, Inc.
FF&E and Casework
77 North Washington Street
Boston, MA 02114

Crabtree McGrath Associates, LLP
FF&E and Casework
161 West Main Street
Georgetown, MA 01833

Vanderweil Engineers, LLP
Mechanical Electrical Technology Plumbing & Fire Protection Engineers
274 Summer Street
Boston, MA 02210

Fuss and O'Neill, Inc.
Hazardous Materials
108 Myrtle Street, Suite 502
Quincy, MA 02171

AM Fogarty
Cost Estimators
175 Derby St, Ste 5
Hingham, Massachusetts 02043

No.	Date	Note
REVISIONS		
No.	Date	Note
ISSUE		

Stamp

NITSCH PROJECT #13609

COMMONWEALTH OF MASSACHUSETTS
DAVID E. PETRUCCO
CIVIL
No. 48079
REGISTERED PROFESSIONAL ENGINEER
5/11/21

For Permitting Only

Key Plan

NORTH

Sheet Title

Segment A

Site Drainage Plan

Drawn By: NJB	Project ID: 1914.00
Reviewed By: BMV/JEG	Scale: 1" = 20'
Issue Date: 06.14.2021	Plot Date: 06.11.2021
Sheet No.	

C7.1

Nitsch Project #13609



90 Concord Street, Ashland, MA

FLANSBURGH

77 NORTH WASHINGTON STREET
BOSTON, MA 02114-1910

FLANSBURGH.COM

Owner Project Manager

Compass Project Management, Inc.
Owners' Project Manager
One Edgewater Drive, Suite 204
Norwood, MA 02062

Consultants

Nitsch Engineering, Inc.
Land Survey/ Traffic/ Civil Engineers
2 Center Plaza
Boston, MA 02108

Stimson Studio
Landscape Architect
288 Norfolk Street
Cambridge, MA 02139

Engineers Design Group Inc
Structural Engineer
350 Main Street
Malden, MA 02148

Stefura Associates, Inc.
FF&E and Casework
77 North Washington Street
Boston, MA 02114

Crabtree McGrath Associates, Inc.
FF&E and Casework
161 West Main Street
Georgetown, MA 01833

Vanderweil Engineers, LLP
Mechanical Electrical Technology
Plumbing & Fire Protection Engineers
274 Summer Street
Boston, MA 02210

Fuss and O'Neill, Inc.
Hazardous Materials
108 Myrtle Street, Suite 502
Quincy, MA 02171

AM Fogarty
Cost Estimators
175 Derby St, Ste 5
Hingham, Massachusetts 02043

No.	Date	Note
REVISIONS		
No.	Date	Note
ISSUE		

Stamp

NITSCH PROJECT #13609

COMMONWEALTH OF MASSACHUSETTS
JAMES J. CANTELUCCI
CIVIL
No. 48079
REGISTERED PROFESSIONAL ENGINEER
5/11/21

For Permitting Only

Key Plan

NORTH

Sheet Title

Segment A

Site Drainage Plan

Drawn By: NJB	Project ID: 1914.00
Reviewed By: BMV/JEG	Scale: 1" = 20'
Issue Date: 06.14.2021	Plot Date: 06.11.2021

Sheet No.

C7.2

Nitsch Project #13609

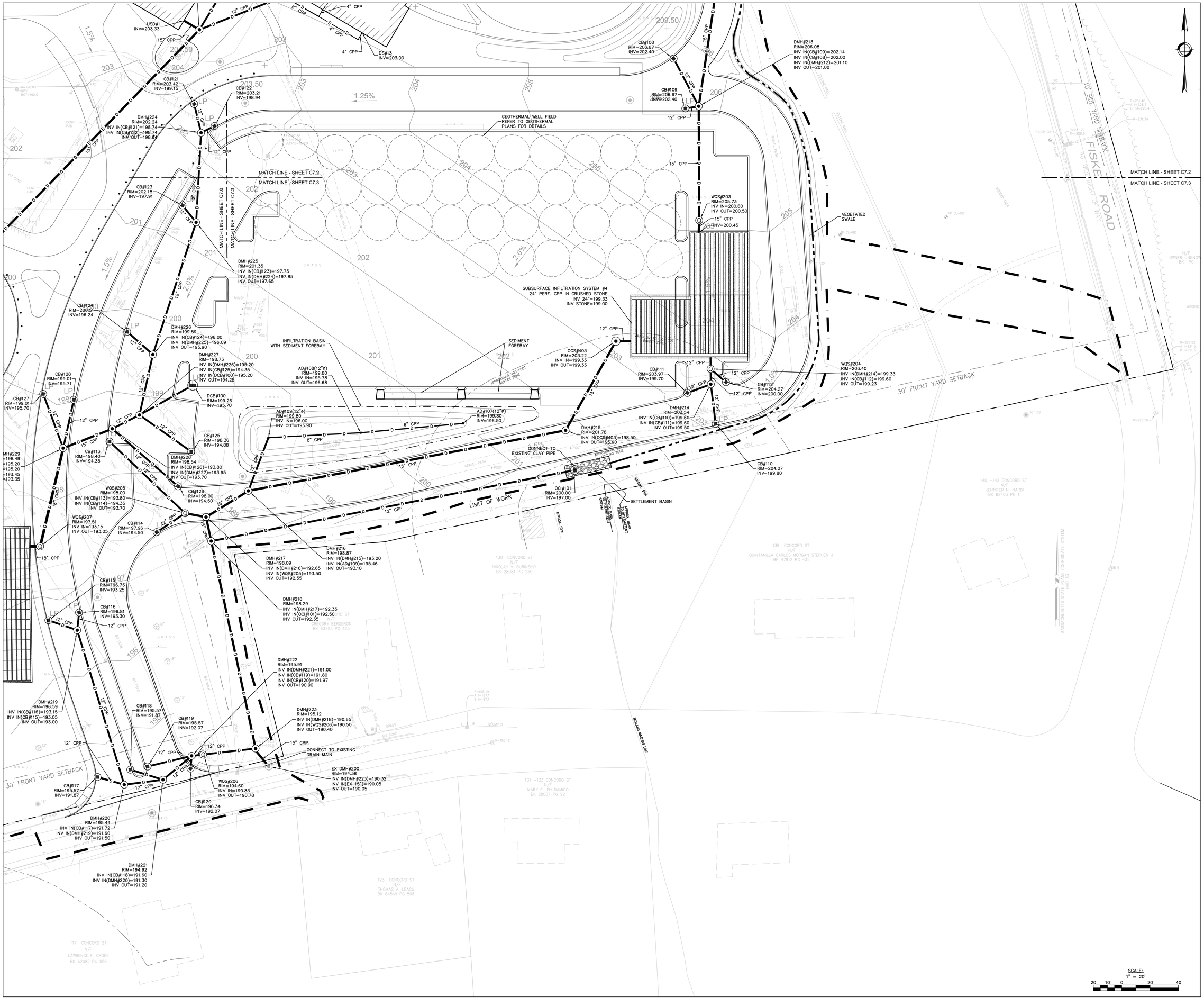

ASHLAND, MASSACHUSETTS
Incorporated 1846
90 Concord Street, Ashland, MA

FLANSBURGH
77 NORTH WASHINGTON STREET
BOSTON, MA 02114-1910
FLANSBURGH.COM

Owner Project Manager

Compass Project Management, Inc.
Owners' Project Manager
One Edgewater Drive, Suite 204
Norwood, MA 02062

Consultants

Nitsch Engineering, Inc.
Land Survey/ Traffic/ Civil Engineers
2 Center Plaza
Boston, MA 02108

Stimson Studio
Landscape Architect
288 Norfolk Street
Cambridge, MA 02139

Engineers Design Group Inc
Structural Engineer
350 Main Street
Malden, MA 02148

Stefura Associates, Inc.
FF&E and Casework
77 North Washington Street
Boston, MA 02114

Crabtree McGrath Associates, Inc.
FF&E and Casework
161 West Main Street
Georgetown, MA 01833

Vanderweil Engineers, LLP
Mechanical Electrical Technology
Plumbing & Fire Protection Engineers
274 Summer Street
Boston, MA 02210

Fuss and O'Neill, Inc.
Hazardous Materials
108 Myrtle Street, Suite 502
Quincy, MA 02171

AM Fogarty
Cost Estimators
175 Derby St, Ste 5
Hingham, Massachusetts 02043

No.	Date	Note
REVISIONS		
No.	Date	Note
ISSUE		

Stamp

NITSCH PROJECT #13609

COMMONWEALTH OF MASSACHUSETTS
JARED E. PICCIRILLO
CIVIL
No. 48079
REGISTERED PROFESSIONAL ENGINEER
6/1/21

For Permitting Only

Key Plan

NORTH

Sheet Title

Segment A

Site Drainage Plan

Drawn By: NJB	Project ID: 1914.00
Reviewed By: BMV/JEG	Scale: 1" = 20'
Issue Date: 06.14.2021	Plot Date: 06.11.2021
Sheet No.	

C7.3

Nitsch Project #13609

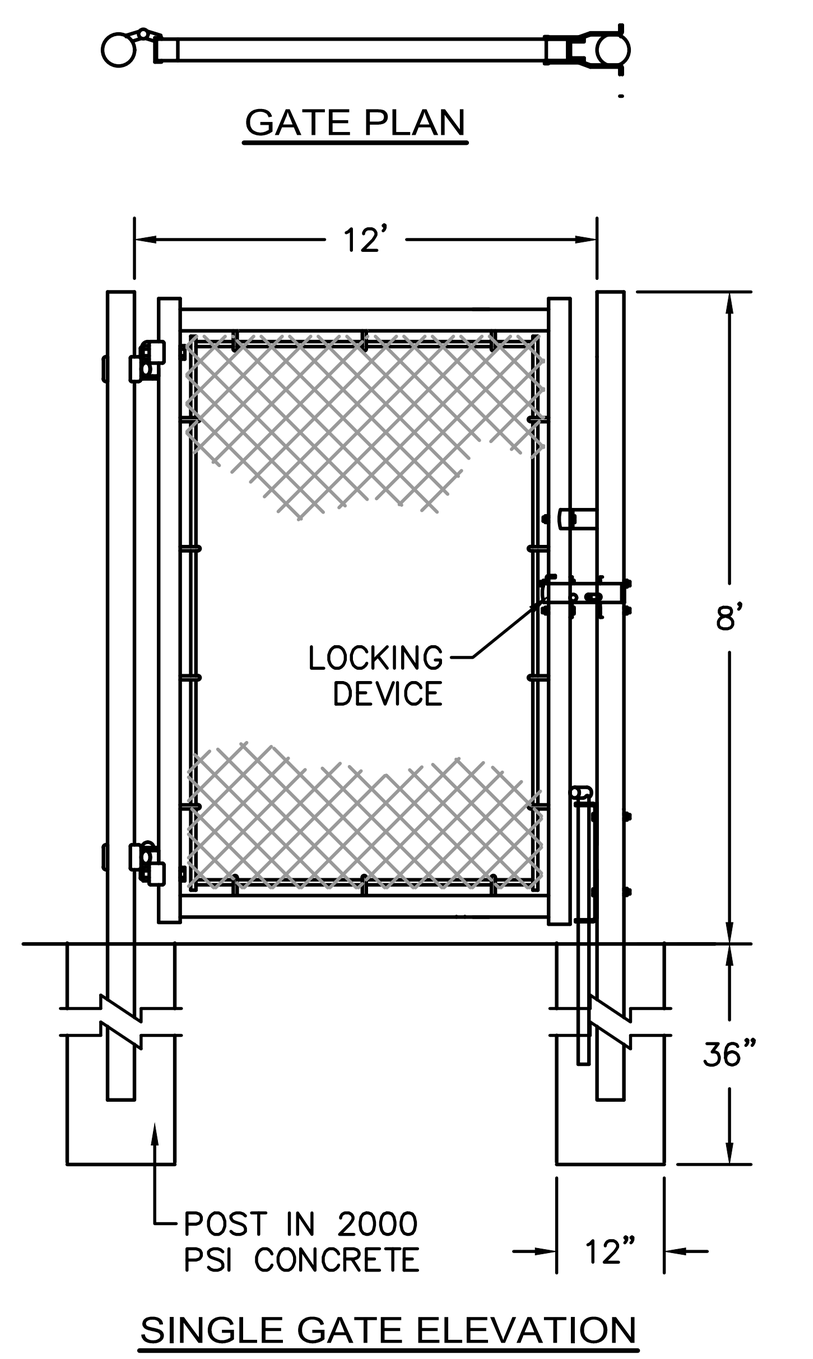

12' WIDE EMERGENCY GATE

NOT TO SCALE

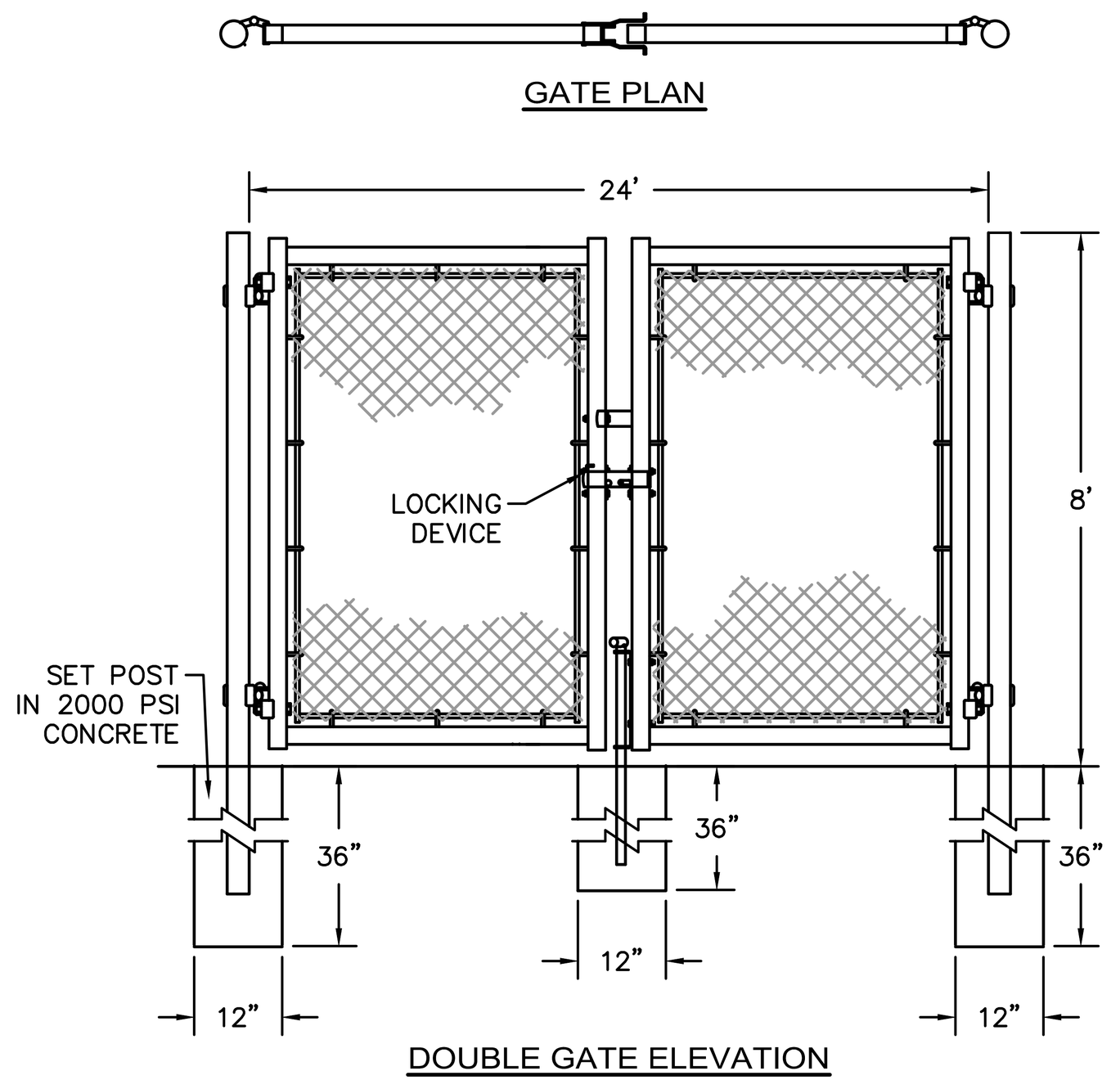

24' WIDE DOUBLE GATE

NOT TO SCALE

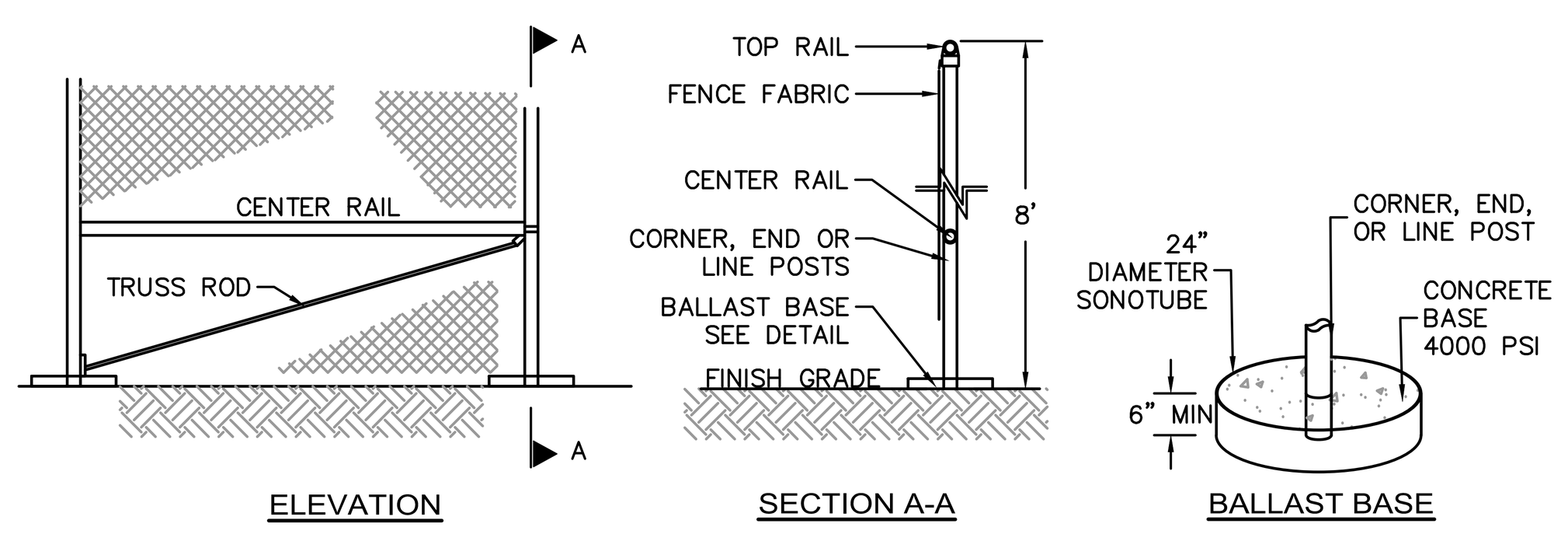

NOTES
1. END, GATE AND CORNER POSTS SHALL BE BRACED TO ADJACENT LINE POSTS. (MORE THAN 30° CHANGE IN DIRECTION CONSTITUTES A CORNER)
2. FABRIC SHALL BE 0.148" GAUGE MIN. WIRE, WOVEN INTO APPROXIMATELY 2" DIAMOND MESH.
3. ZINC-COATED STEEL FABRIC BASE METAL SHALL BE COATED WITH PRIME WESTERN SPELTER OR EQUAL.
4. ALUMINUM COATED STEEL FABRIC BASE METAL SHALL BE COATED WITH ALUMINUM ALLOY.
5. LINE POSTS SHALL BE 2½" O.D. END OR CORNER POSTS SHALL BE 3" O.D.
6. THE CONTRACTOR IS RESPONSIBLE FOR SURFACE RESTORATION ONCE THE FENCE IS REMOVED.
7. THE CONTRACTOR SHALL REMOVE AND DISPOSE OF THE TEMPORARY CONSTRUCTION FENCE AT THE CONCLUSION OF THE PROJECT.

TEMPORARY CHAIN LINK CONSTRUCTION FENCE WITH BALLAST BASE

NOT TO SCALE

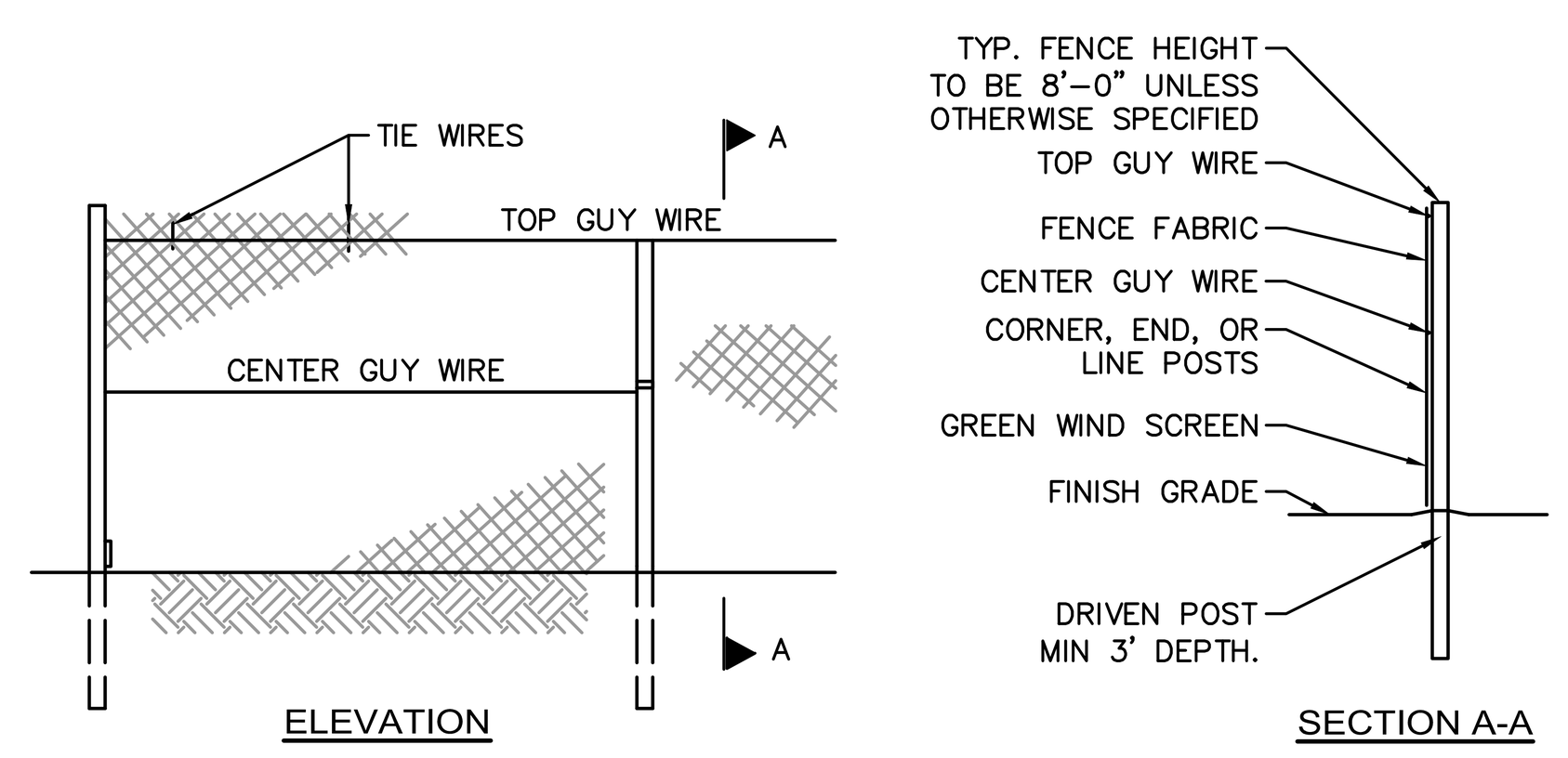

CONSTRUCTION FENCE AND GATE NOTES:
1. FABRIC SHALL BE 0.148" WIRE, WOVEN INTO APPROXIMATELY 2" DIAMOND MESH.
2. THE FENCE FABRIC SHALL BE ZINC COATED STEEL OR ALUMINUM COATED STEEL.
3. FENCE POSTS SHALL RECEIVE THE SAME COATING AND TREATMENT AS THE FENCE FABRIC (DESCRIBED ABOVE).
4. THE CONTRACTOR SHALL ADD A GREEN WIND SCREEN
5. LINE POSTS SHALL BE 2½" O.D. END OR CORNER POSTS SHALL BE 3" O.D.
6. THE CONTRACTOR IS RESPONSIBLE FOR SURFACE RESTORATION ONCE THE FENCE IS REMOVED.
7. THE CONTRACTOR SHALL REMOVE AND DISPOSE OF THE TEMPORARY CONSTRUCTION FENCE AT THE CONCLUSION OF THE PROJECT.

CHAIN LINK CONSTRUCTION FENCE

NOT TO SCALE

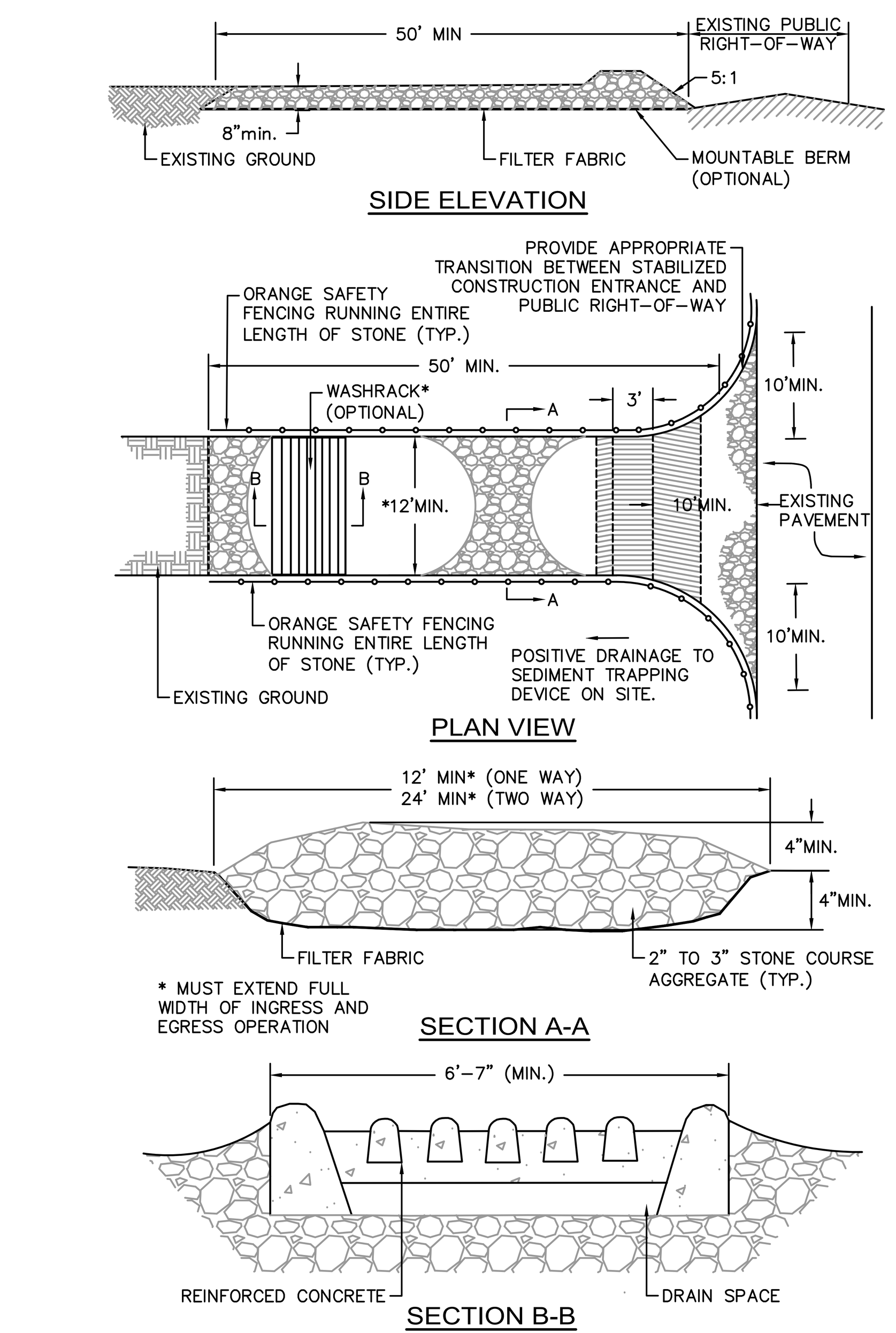

CONSTRUCTION SPECIFICATIONS
1. LENGTH – GREATER THAN OR EQUAL TO 50 FEET
2. WIDTH – TWELVE FOOT MINIMUM (ONE WAY), TWENTY FOUR FOOT MINIMUM (TWO WAY), BUT NOT LESS THAN THE FULL WIDTH AT POINTS WHERE INGRESS OR EGRESS OCCURS.
3. SURFACE WATER – ALL SURFACE WATER FLOWING OR DIVERTED TOWARD CONSTRUCTION ENTRANCES SHALL BE PIPED ACROSS THE ENTRANCE. IF PIPING IS IMPRACTICAL, A MOUNTABLE BERM SHALL BE PERMITTED.
4. THICKNESS – 8"
5. MAINTENANCE – THE ENTRANCE SHALL BE MAINTAINED IN A CONDITION WHICH SHALL PREVENT TRACKING OR FLOWING OF SEDIMENT ONTO PUBLIC RIGHTS-OF-WAY. THIS MAY REQUIRE PERIODIC TOP DRESSING WITH ADDITIONAL STONE AS CONDITIONS DEMAND AND REPAIR OR CLEANOUT OF ANY MEASURES USED TO TRAP SEDIMENT. ALL SEDIMENT SPILLED, DROPPED, WASHED OR TRACKED ONTO PUBLIC RIGHTS-OF-WAY MUST BE REMOVED IMMEDIATELY.
6. PERIODIC INSPECTION AND NEEDED MAINTENANCE SHALL BE PROVIDED.

STABILIZED CONSTRUCTION ENTRANCE

NOT TO SCALE

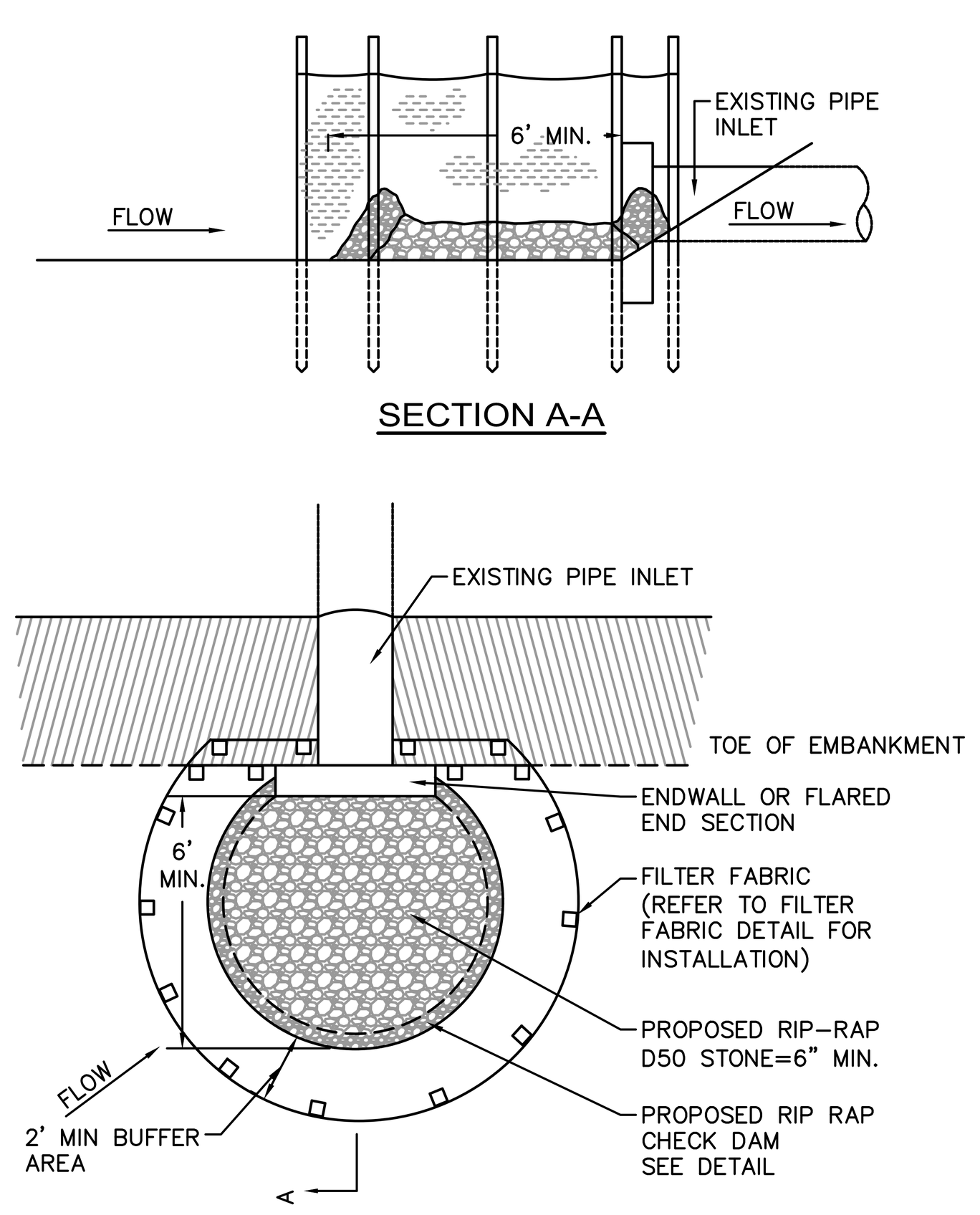

CULVERT INLET PROTECTION WITH SILT FENCE

NOT TO SCALE

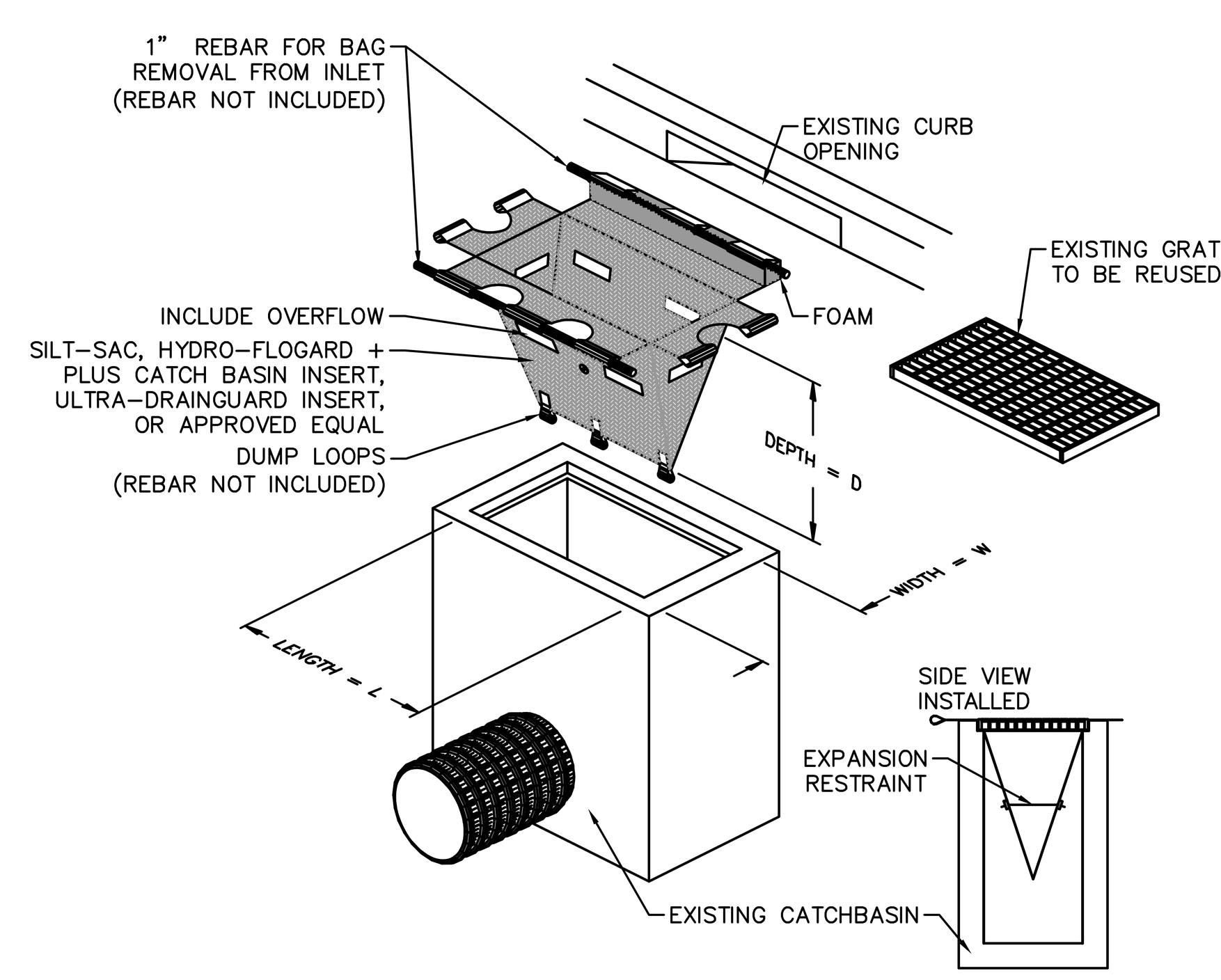

THIS METHOD OF INLET PROTECTION IS APPLICABLE WHERE THE INLET DRAINS SHEET, OVERLAND OR CONCENTRATED FLOWS (NOT GREATER THAN 1 CFS). THE METHOD CAN DRAIN FLAT AREA TO STEEP SLOPES. INLET CAPACITY WILL BE DECREASED WITH THIS METHOD AND THE CONTRACTOR SHALL EXPECT PONDING DURING HIGH FLOW EVENTS.

INLET PROTECTION - OPTION 1 CATCH BASIN WITH SILTATION SACK

NOT TO SCALE

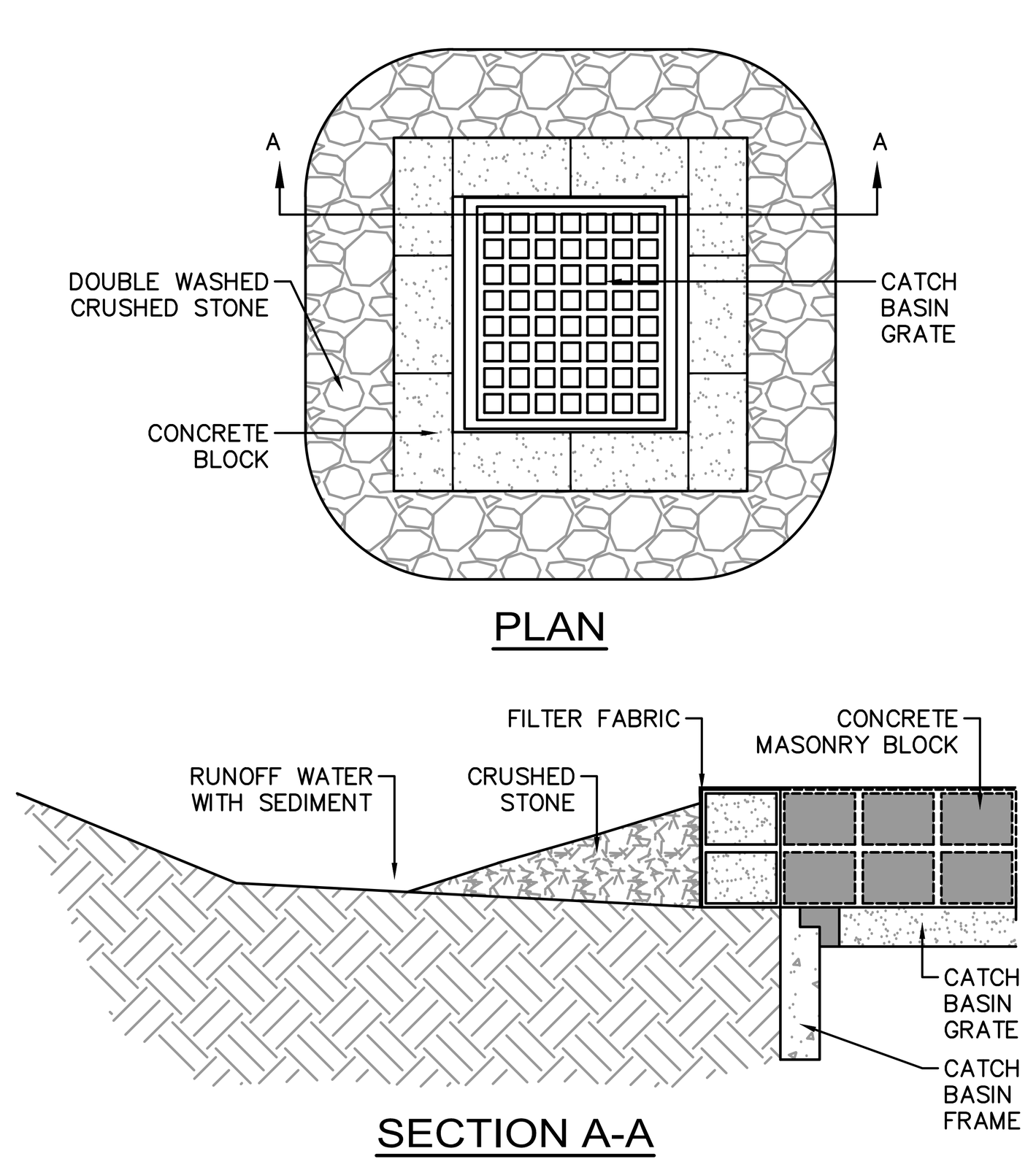

THIS METHOD OF INLET PROTECTION IS APPLICABLE WHERE HEAVY FLOWS ARE EXPECTED AND WHERE AN OVERFLOW CAPACITY IS NECESSARY TO PREVENT EXCESSIVE PONDING AROUND STRUCTURE.

INLET PROTECTION - OPTION 2 CATCH BASIN W/ BLOCK AND GRAVEL

NOT TO SCALE

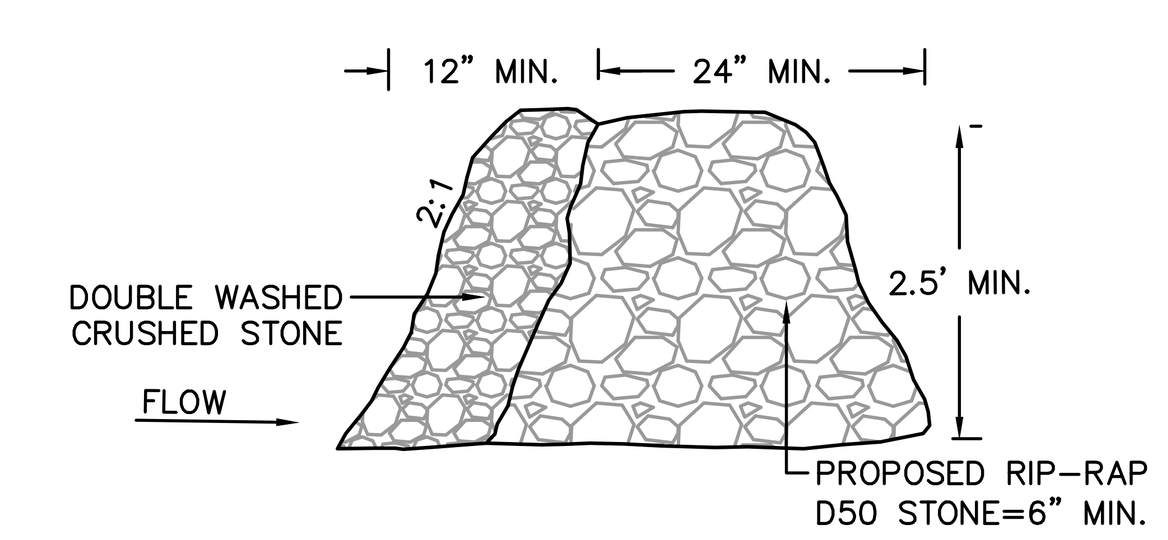

RIP-RAP CHECK DAM DETAIL

NOT TO SCALE

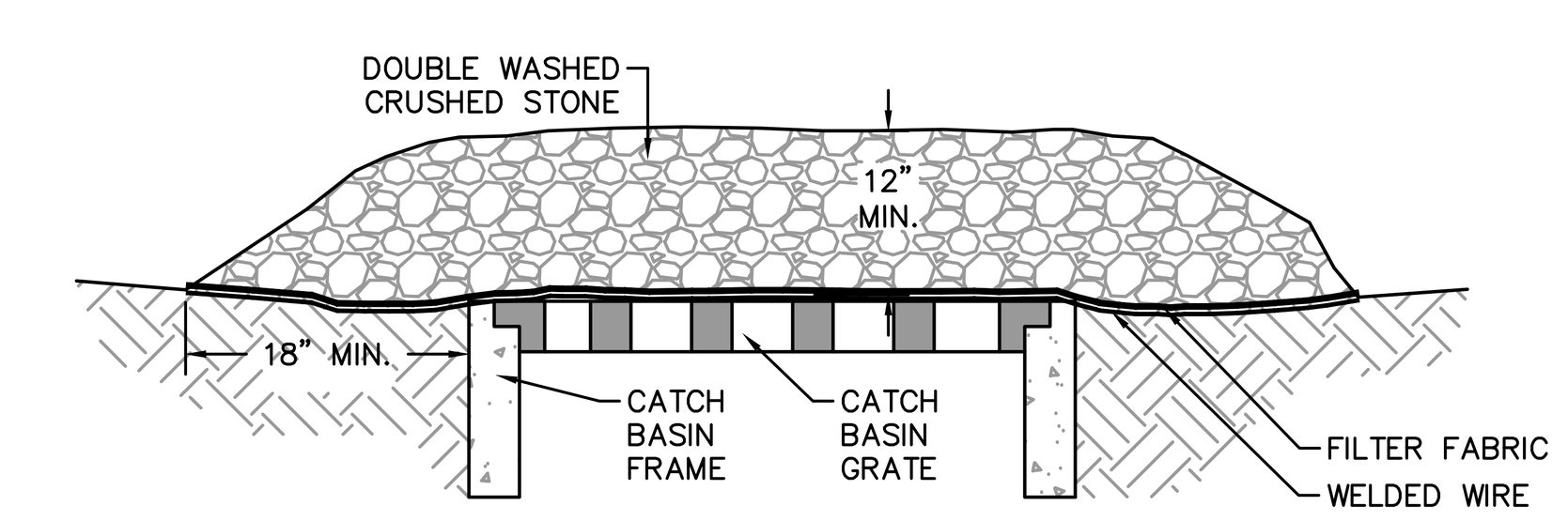

THIS METHOD OF INLET PROTECTION IS APPLICABLE WHERE HEAVY FLOWS ARE EXPECTED, BUT NOT WHERE PONDING AROUND THE STRUCTURE MIGHT CAUSE EXCESSIVE INCONVENIENCE OR DAMAGE TO ADJACENT STRUCTURES AND UNPROTECTED AREAS. THIS METHOD NOT ACCEPTABLE IN ACTIVE TRAFFIC AREAS.

INLET PROTECTION - OPTION 3 CATCH BASIN WITH GRAVEL

NOT TO SCALE

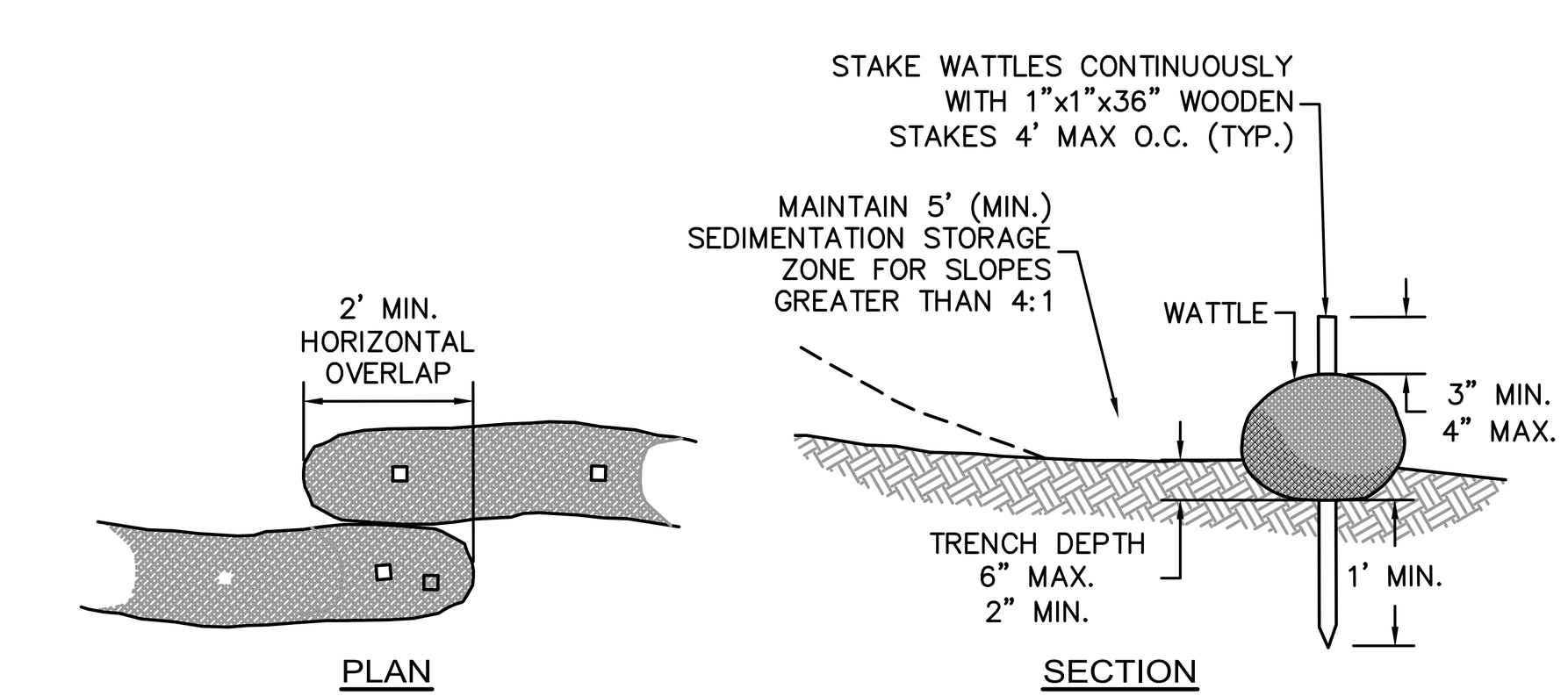

NOTE
ACCEPTABLE TYPES OF WATTLES ARE COIR (COCONUT FIBER), COMPOST, OR STRAW

EROSION CONTROL BARRIER WATTLES FOR SLOPES LESS THAN 10:1

NOT TO SCALE

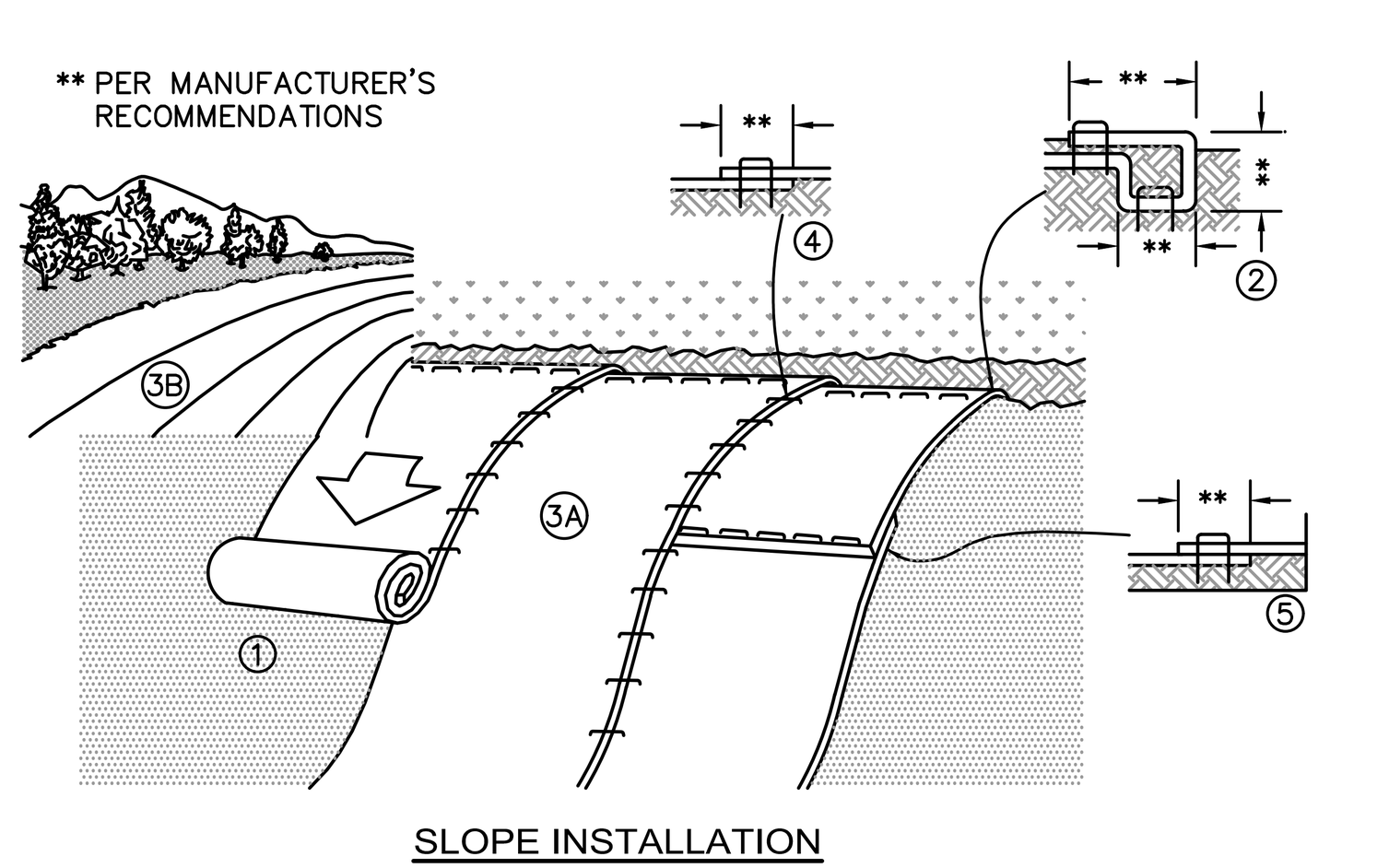

SLOPE INSTALLATION

NOTES:

1. PREPARE SOIL BEFORE INSTALLING EROSION CONTROL BLANKETS (ECB's), INCLUDING ANY NECESSARY APPLICATION OF LIME, FERTILIZER, AND SEED.
2. BEGIN AT THE TOP OF THE SLOPE BY ANCHORING THE ECB's IN ACCORDANCE WITH THE MANUFACTURER'S RECOMMENDATIONS. APPLY SEED TO COMPACTED SOIL AND FOLD REMAINING PORTION OF ECB's BACK OVER SEED AND COMPACTED SOIL. SECURE ECB's OVER COMPACTED SOIL WITH A ROW OF STAKES/STAPLES SPACED ACCORDANCE TO THE MANUFACTURER'S RECOMMENDATIONS ACROSS THE WIDTH OF THE ECB's.
3. ROLL THE ECB's DOWN (A) OR HORIZONTALLY (B) ACROSS THE SLOPE. ECB's WILL UNROLL WITH APPROPRIATE SIDE AGAINST THE SOIL SURFACE. ALL ECB's MUST BE SECURELY FASTENED TO SOIL SURFACE BY PLACING STAKES/STAPLES IN APPROPRIATE LOCATIONS AS SHOWN ON THE STAKE/STAPLE PATTERN GUIDE.
4. THE EDGES OF PARALLEL ECB's MUST BE STAKED/STAPLED WITH OVERLAP DEPENDING ON ECB's TYPE. SEE THE MANUFACTURER'S RECOMMENDATIONS.
5. CONSECUTIVE ECB's SPLICED DOWN THE SLOPE MUST BE PLACED END OVER END (SHINGLE STYLE) WITH AN OVERLAP (SEE THE MANUFACTURER'S RECOMMENDATIONS). STAKE/STAPLE THROUGH OVERLAPPED AREA, ACROSS ENTIRE ECB's WIDTH PER MANUFACTURER'S RECOMMENDATIONS.
6. IN LOOSE SOIL CONDITIONS, THE USE OF STAKE OR STAPLE LENGTHS GREATER THAN 6" MAY BE NECESSARY TO PROPERLY SECURE THE ECB's.
7. THE CONTRACTOR SHALL FOLLOW ALL INSTALLATION INSTRUCTIONS AS RECOMMENDED BY THE MANUFACTURER.

TEMPORARY EROSION CONTROL BLANKET FOR STEEP SLOPES DETAIL

NOT TO SCALE

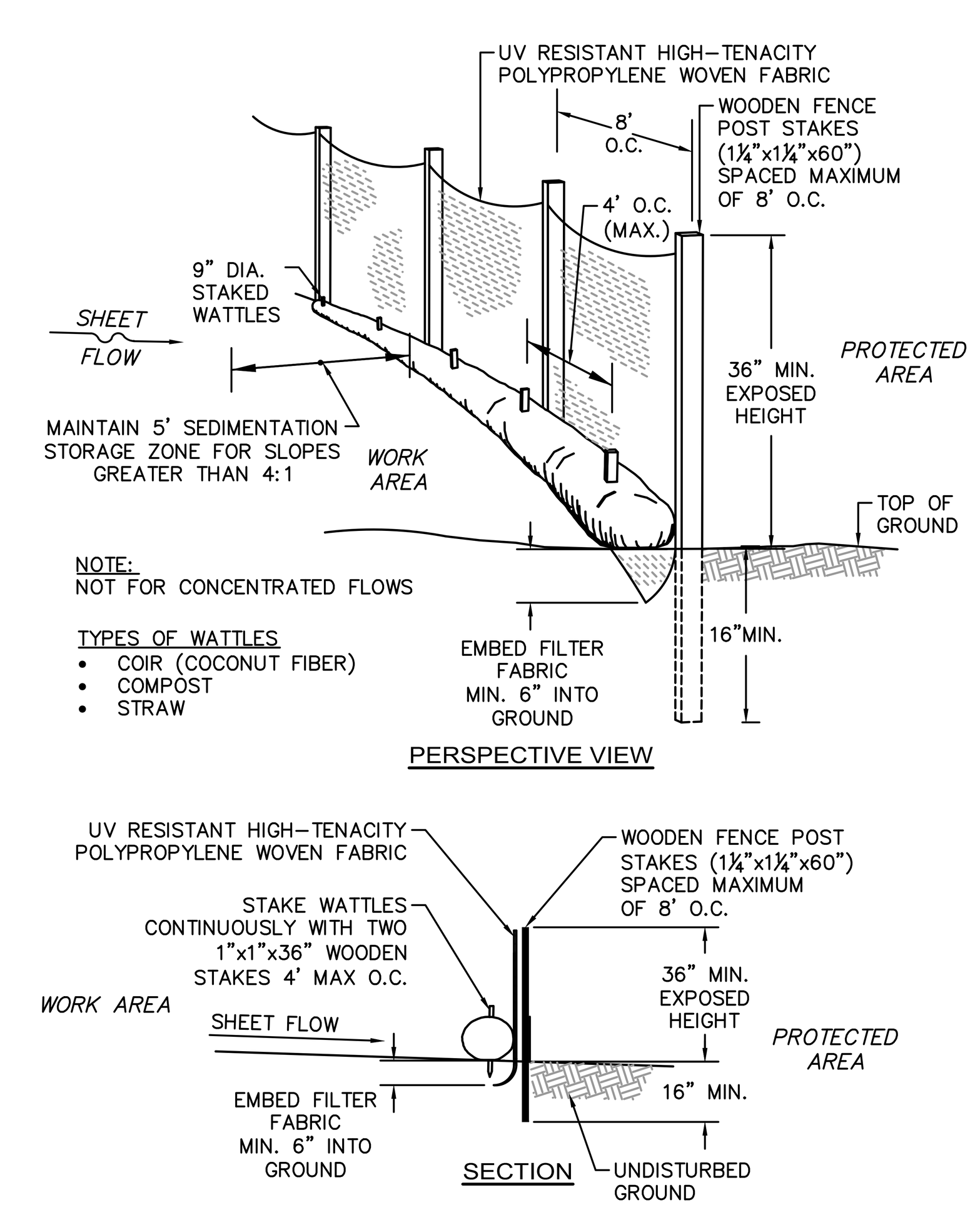

NOTE:
NOT FOR CONCENTRATED FLOWS

TYPES OF WATTLES
- COIR (COCONUT FIBER)
- COMPOST
- STRAW

PERIMETER EROSION CONTROL BARRIER OPTION B - SILT FENCE DETAIL WITH WATTLES

NOT TO SCALE

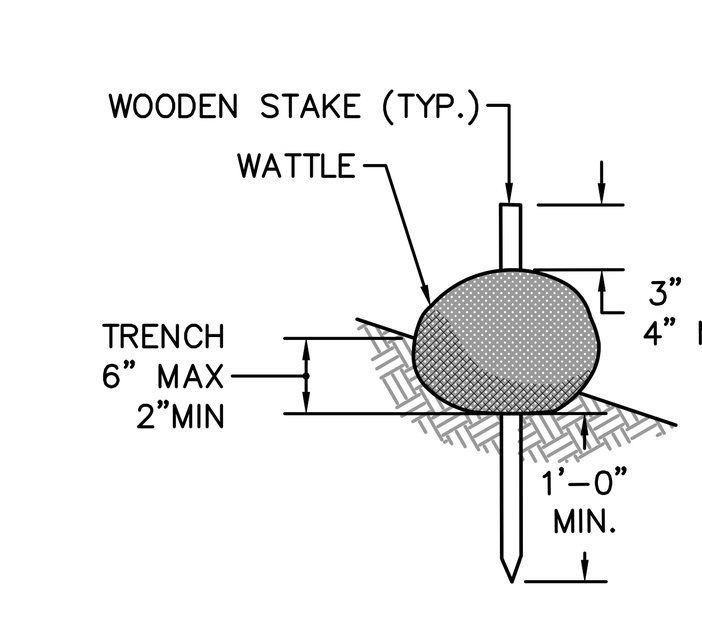

TYPES OF WATTLES
- COIR (COCONUT FIBER)
- COMPOST
- STRAW

WATTLE SPACING TABLE	
SLOPE	MAX. SPACING
1:1	10'-0"
2:1	20'-0"
3:1	30'-0"
4:1	40'-0"

WATTLE SLOPE PROTECTION NOTES:

1. SECURELY KNOT EACH END OF WATTLE. ABUT ADJACENT WATTLES TIGHTLY, END TO END, WITHOUT OVERLAPPING THE ENDS.
2. PILOT HOLES MAY BE DRIVEN THROUGH THE WATTLES AND INTO THE SOIL WHEN SOIL CONDITIONS REQUIRE
3. WATTLES SHALL BE INSPECTED REGULARLY, AND IMMEDIATELY AFTER A RAINFALL PRODUCES RUNOFF, TO ENSURE THEY REMAIN THOROUGHLY ENTRENCHED AND IN CONTACT WITH THE SOIL.
4. ONLY INSTALL WATTLE(S) TO A HEIGHT IN DITCH SO FLOW WILL NOT WASH AROUND WATTLE AND SCOUR DITCH SLOPES AND AS DIRECTED.

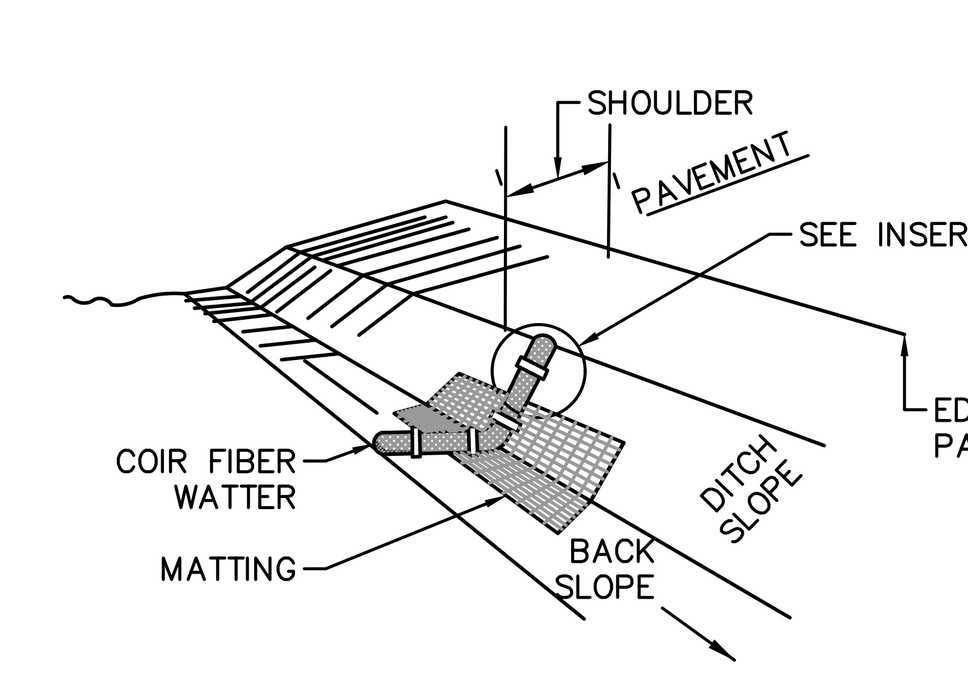

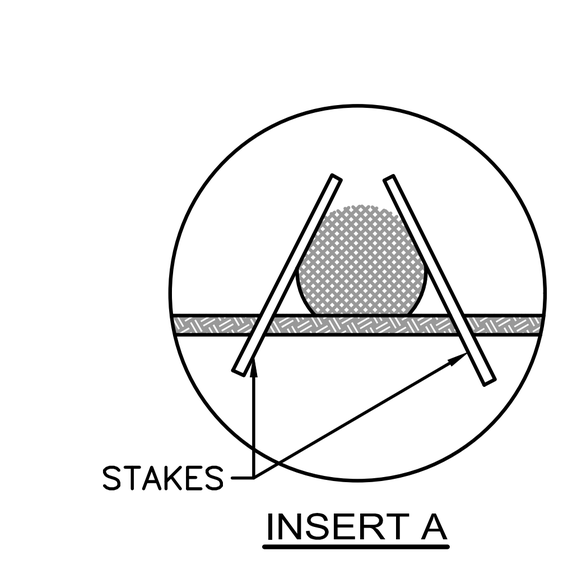

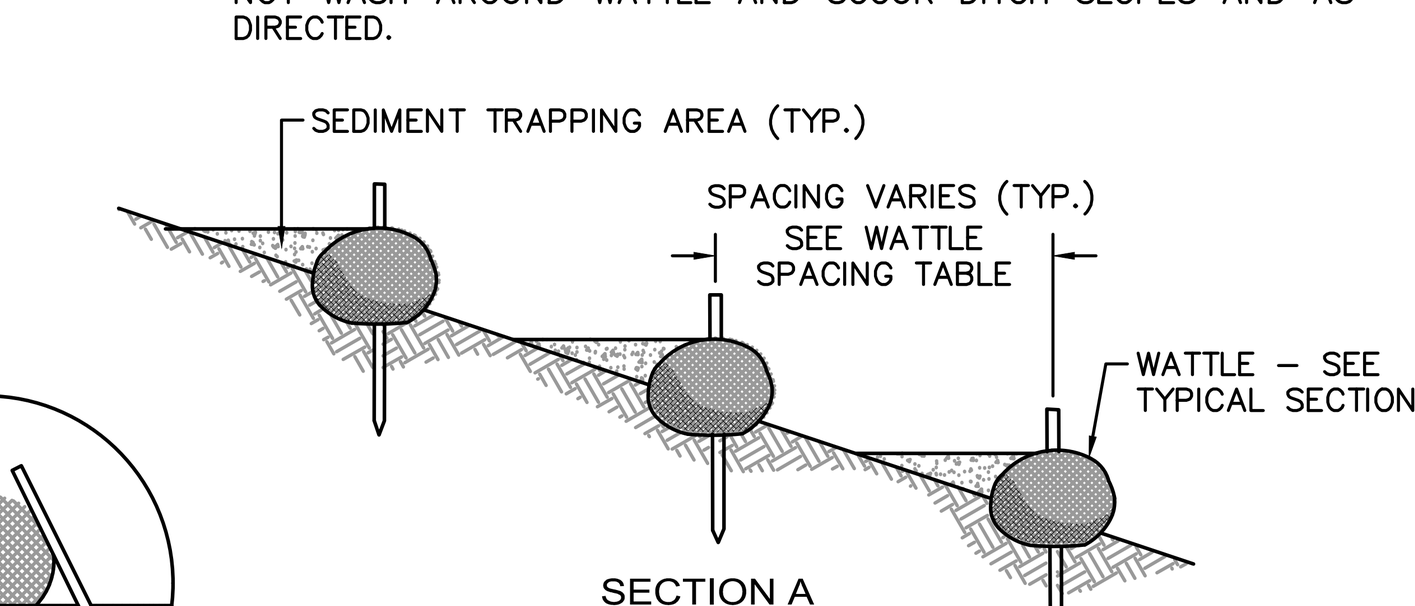

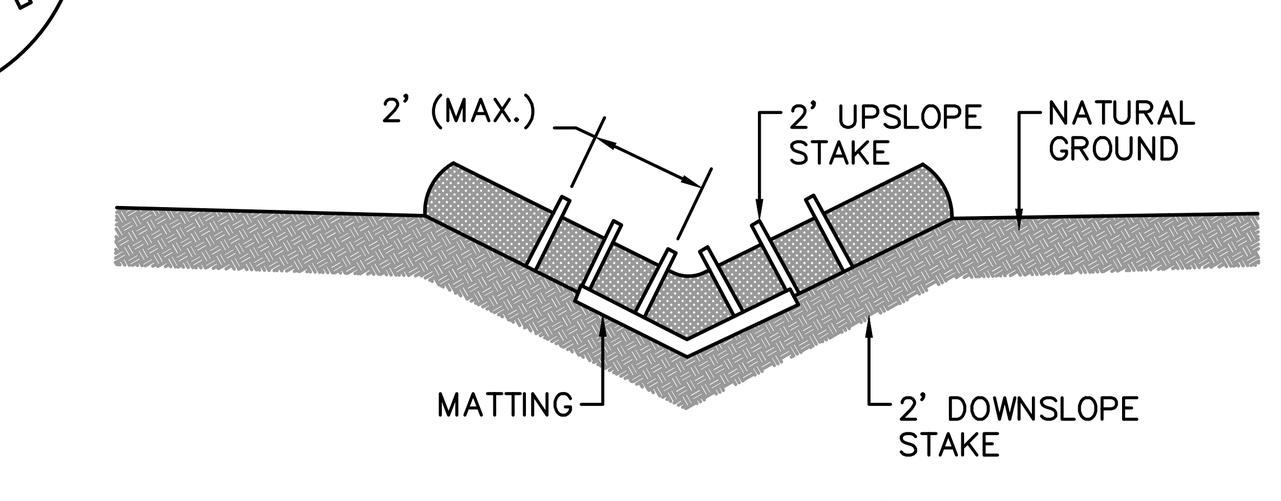

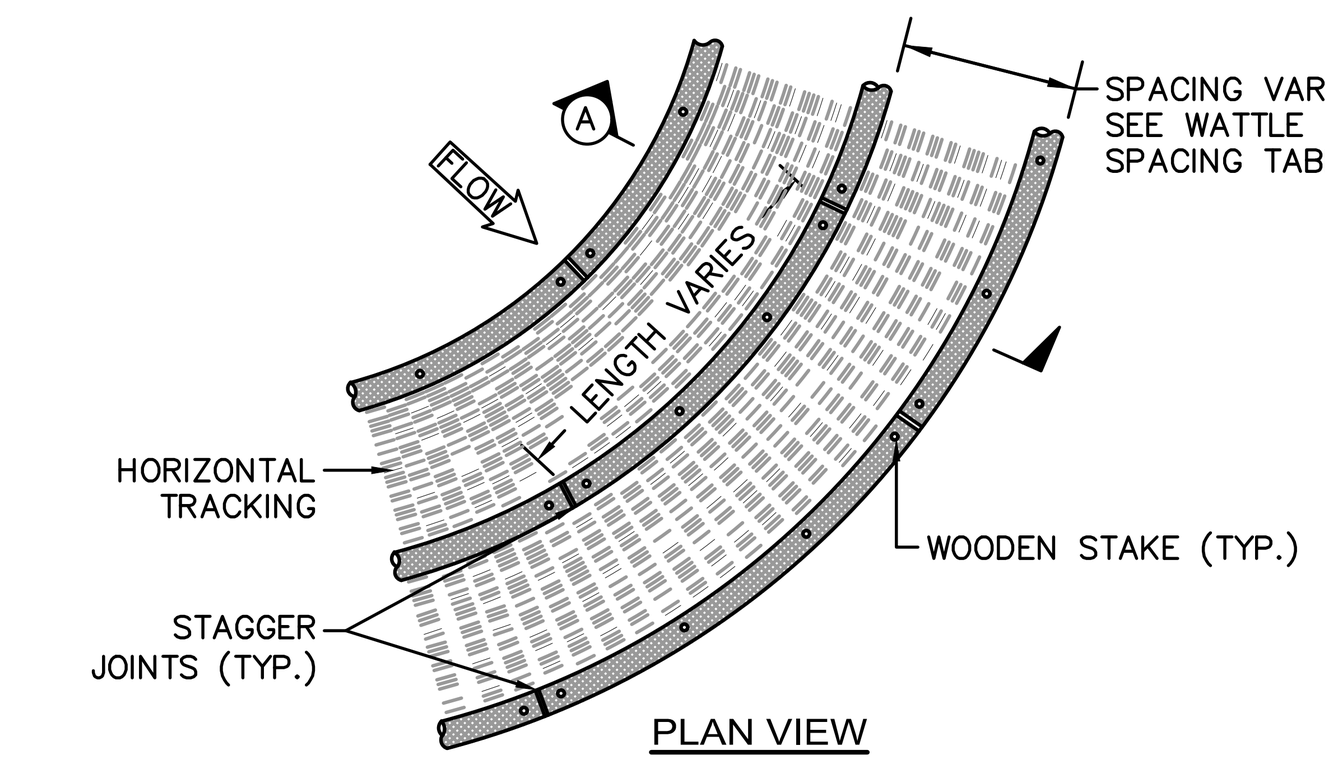

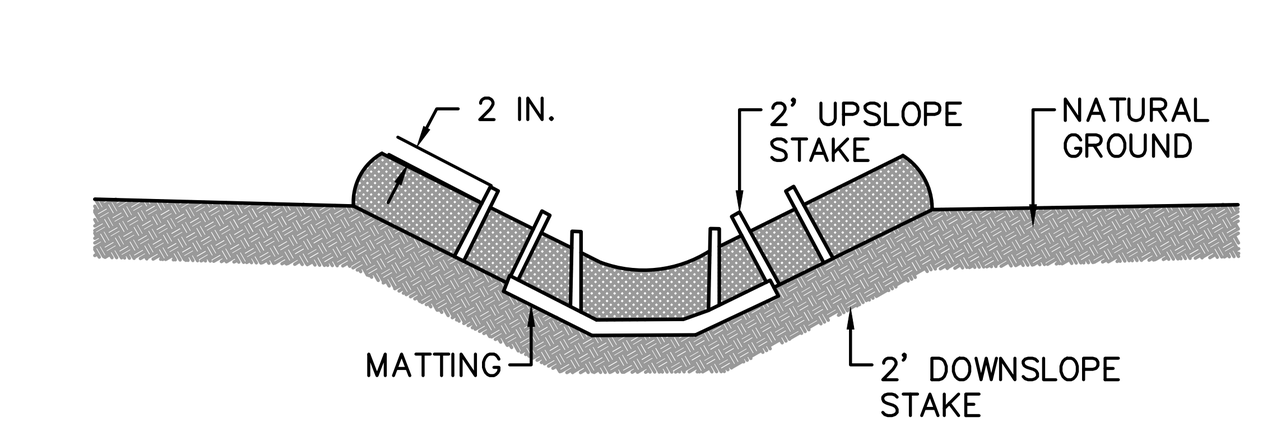

EROSION CONTROL BARRIER - WATTLES FOR STEEP SLOPES

NOT TO SCALE

ASHLAND, MASSACHUSETTS Incorporated 1846

90 Concord Street, Ashland, MA

FLANSBURGH

77 NORTH WASHINGTON STREET
BOSTON, MA 02114-1910
FLANSBURGH.COM

Owner Project Manager

Compass Project Management, Inc.
Owners' Project Manager
One Edgewater Drive, Suite 204
Norwood, MA 02062

Consultants

Nitsch Engineering, Inc.
Land Survey/ Traffic/ Civil Engineers
2 Center Plaza
Boston, MA 02108

Stimson Studio
Landscape Architect
288 Norfolk Street
Cambridge, MA 02139

Engineers Design Group Inc
Structural Engineer
350 Main Street
Malden, MA 02148

Stefura Associates, Inc.
FF&E and Casework
77 North Washington Street
Boston, MA 02114

Crabtree McGrath Associates, Inc.
FF&E and Casework
161 West Main Street
Georgetown, MA 01833

Vanderweil Engineers, LLP
Mechanical Electrical Technology Plumbing & Fire Protection Engineers
274 Summer Street
Boston, MA 02210

Fuss and O'Neill, Inc.
Hazardous Materials
108 Myrtle Street, Suite 502
Quincy, MA 02171

AM Fogarty
Cost Estimators
175 Derby St, Ste 5
Hingham, Massachusetts 02043

No.	Date	Note
REVISIONS		

No.	Date	Note
ISSUE		

Stamp

NITSCH PROJECT #13609
COMMONWEALTH OF MASSACHUSETTS JARED E. GENTILUCCI CIVIL No. 48079 REGISTERED PROFESSIONAL ENGINEER
6/11/21

For Permitting Only

Key Plan

NORTH

Sheet Title
Segment A
EROSION AND SEDIMENTATION CONTROL DETAILS

Drawn By	Project ID
NJB	1914.00
Reviewed By	Scale
BMV/JEG	NOT TO SCALE
Issue Date	Plot Date
06.14.2021	06.11.2021

Sheet No.

C8.0

Nitsch Project #13609

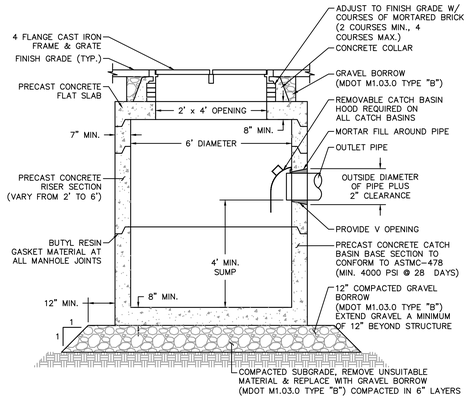

TYPICAL DOUBLE CATCH BASIN DETAIL

NOT TO SCALE

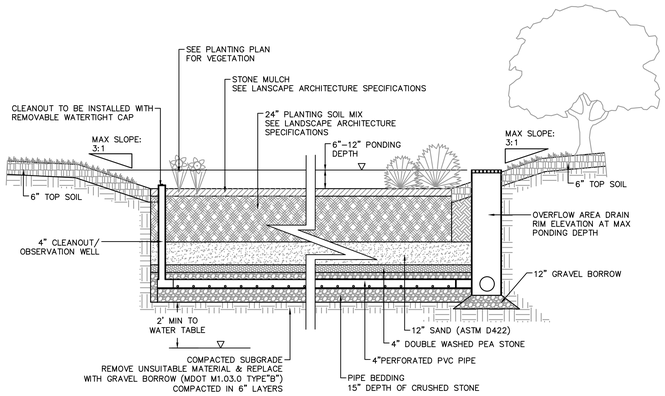

BIORETENTION BASIN

NOT TO SCALE

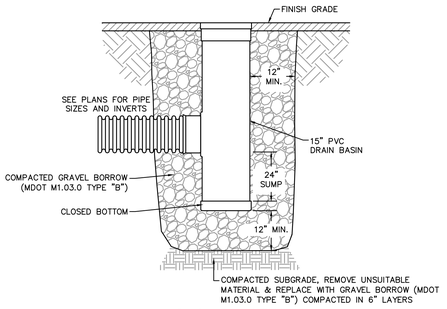

SECTION VIEW

NOTES:
1. FRAME AND GRATE SHALL BE DUCTILE IRON CONFORMING TO ASTM A536 GRADE 70-50-05.
2. 15" AREA DRAINS SHALL BE NYLOPLAST MODEL 2815 AS MANUFACTURED BY ADVANCED DRAINAGE SYSTEMS, INC., OR APPROVED EQUAL.
3. AREA DRAINS SHALL BE CUSTOM MANUFACTURED ACCORDING TO THE PLANS AND DETAIL.
4. CASTINGS SHALL BE FURNISHED WITH A BLACK PAINT.
5. SEE PLANS FOR LAYOUT AND ELEVATIONS OF DRAIN PIPES TO AREA DRAINS.

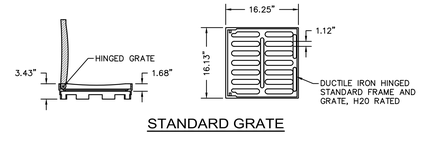

STANDARD GRATE



DOMED GRATE

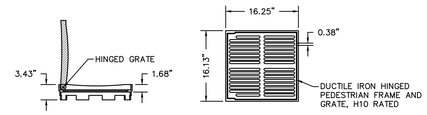

PEDESTRIAN GRATE (ADA COMPLIANT)

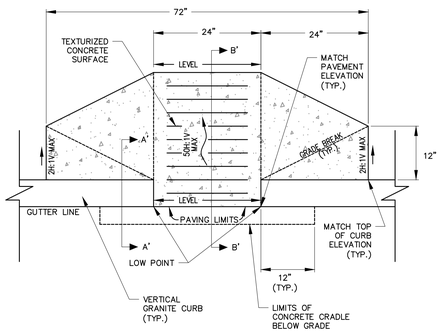

15" AREA DRAIN DETAIL

NOT TO SCALE

STRUCTURE NAME	WQS#214	WQS#218	WQS#226	WQS#233	WQS#243
MINIMUM WQF	0.73 CFS	0.50 CFS	0.61 CFS	0.29 CFS	0.37 CFS
PEAK FLOW RATE*	19.92 CFS	5.62 CFS	5.58 CFS	4.07 CFS	21.68 CFS
MINIMUM SEDIMENT STORAGE CAPACITY	60 CF	60 CF	60 CF	60 CF	60 CF

* PEAK FLOW RATE BASED ON RATIONAL ANALYSIS FOR A 25-YEAR STORM EVENT. STRUCTURE SHALL BE ABLE TO PASS PEAK FLOW RATE WITHOUT CAUSING A BACKWATER CONDITION.

NOTES:
1. THE USE OF FLEXIBLE CONNECTIONS IS RECOMMENDED AT THE INLET AND OUTLET WHERE APPLICABLE.
2. THE COVER SHOULD BE POSITIONED OVER THE OUTLET DROP PIPE AND THE OIL CLEANOUT PIPE.
3. STRUCTURE DESIGNED FOR H20 LOADING

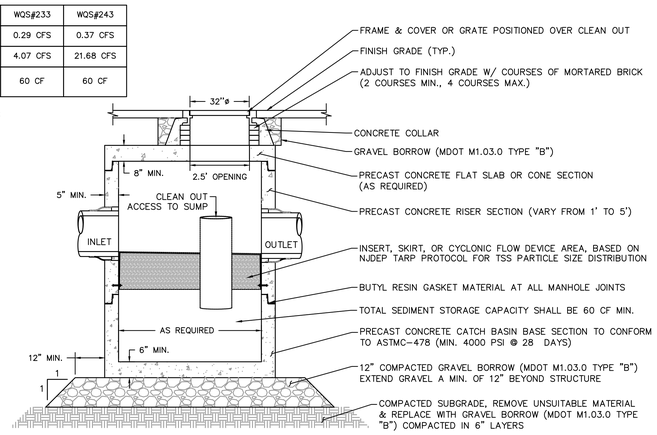

WATER QUALITY STRUCTURE DETAIL

NOT TO SCALE

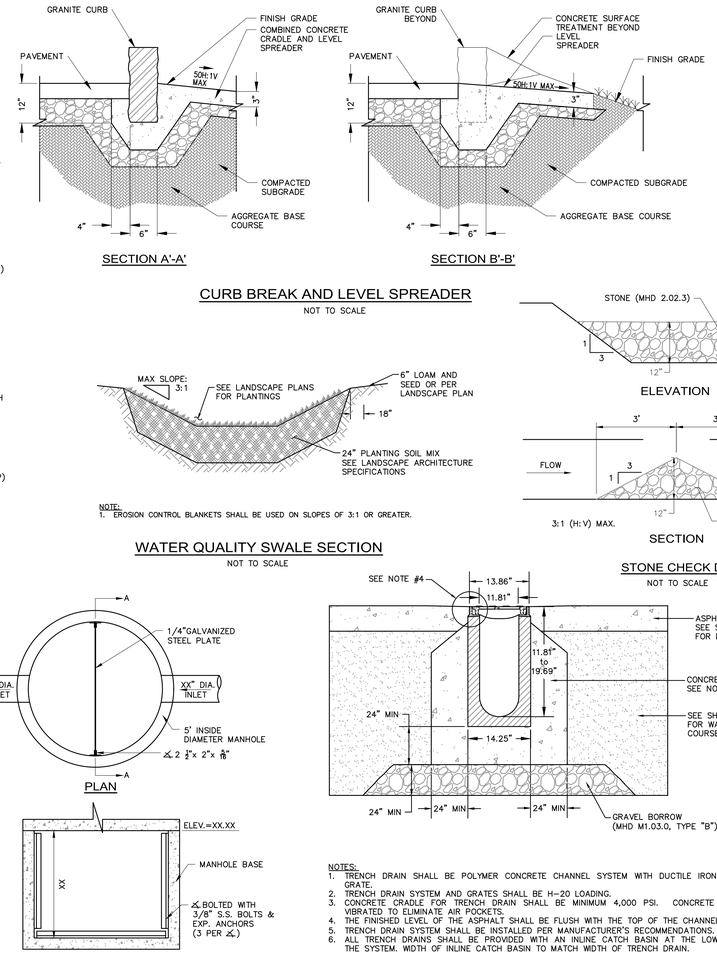

SECTION A'-A'

SECTION B'-B'

CURB BREAK AND LEVEL SPREADER

NOT TO SCALE

NOTE:
1. EROSION CONTROL BLANKETS SHALL BE USED ON SLOPES OF 3:1 OR GREATER.

WATER QUALITY SWALE SECTION

NOT TO SCALE

SECTION

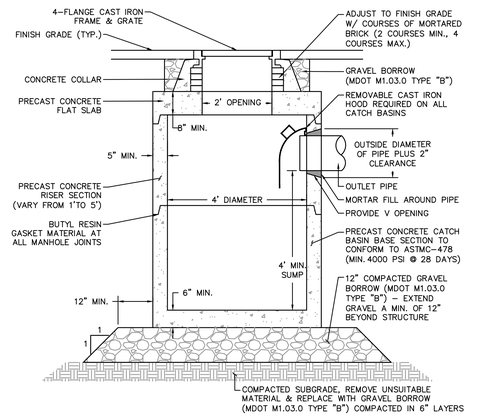

TYPICAL CATCH BASIN DETAIL

NOT TO SCALE

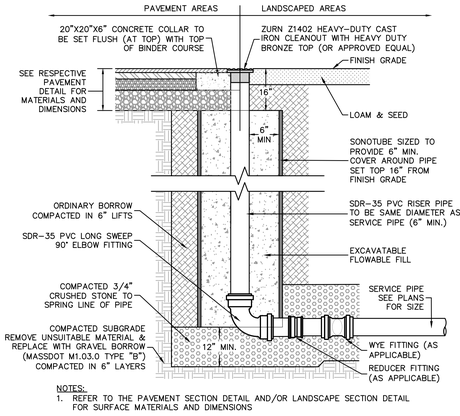

NOTES:
1. REFER TO THE PAVEMENT SECTION DETAIL AND/OR LANDSCAPE SECTION DETAIL FOR SURFACE MATERIALS AND DIMENSIONS

CLEANOUT DETAIL

NOT TO SCALE

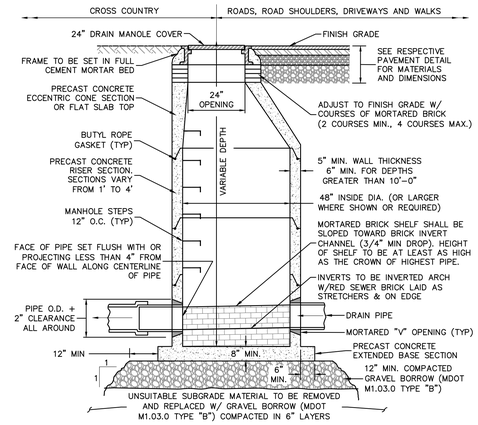

TYPICAL DRAIN MANHOLE DETAIL

NOT TO SCALE

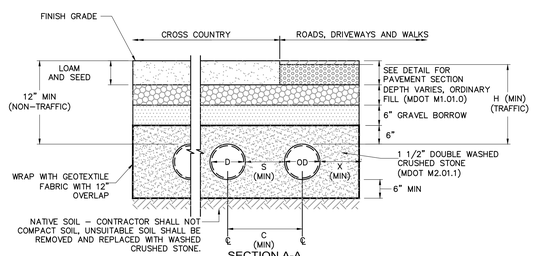

SECTION A-A

UNDERGROUND STORMWATER DETENTION SYSTEM DETAIL

NOT TO SCALE

NOMINAL DIAMETER (D)	OUTSIDE DIAMETER (OD)	MIN. SPACING			
		C	S	X	H
24"	28"	41.5"	14"	10"	12"

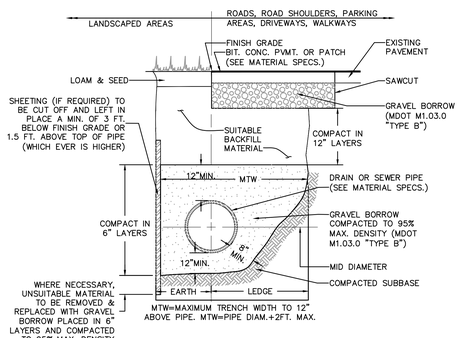

STANDARD TRENCH DETAIL FOR DRAIN AND SEWER PIPE

NOT TO SCALE

SECTION A-A

OUTLET CONTROL STRUCTURE

NOT TO SCALE

STONE CHECK DAM

NOT TO SCALE

NOTES:
1. TRENCH DRAIN SHALL BE POLYMER CONCRETE CHANNEL SYSTEM WITH DUCTILE IRON RAIL AND GRATE.
2. TRENCH DRAIN SYSTEM AND GRATES SHALL BE H-20 LOADING.
3. CONCRETE CRADLE FOR TRENCH DRAIN SHALL BE MINIMUM 4,000 PSI. CONCRETE SHALL BE VIBRATED TO ELIMINATE AIR POCKETS.
4. THE FINISHED LEVEL OF THE ASPHALT SHALL BE FLUSH WITH THE TOP OF THE CHANNEL EDGE.
5. TRENCH DRAIN SYSTEM SHALL BE INSTALLED PER MANUFACTURER'S RECOMMENDATIONS.
6. ALL TRENCH DRAINS SHALL BE PROVIDED WITH AN INLINE CATCH BASIN AT THE LOW POINT OF THE SYSTEM. WIDTH OF INLINE CATCH BASIN TO MATCH WIDTH OF TRENCH DRAIN.

12" TRENCH DRAIN DETAIL IN ASPHALT WALK

NOT TO SCALE

ASHLAND, MASSACHUSETTS Incorporated 1846

90 Concord Street, Ashland, MA

FLANSBURGH

77 NORTH WASHINGTON STREET
BOSTON, MA 02114-1910

FLANSBURGH.COM

Owner Project Manager

Compass Project Management, Inc.
Owners' Project Manager
One Edgewater Drive, Suite 204
Norwood, MA 02062

Consultants

Nitsch Engineering, Inc.
Land Survey/ Traffic/ Civil Engineers
2 Center Plaza
Boston, MA 02108

Stimson Studio
Landscape Architect
288 Norfolk Street
Cambridge, MA 02139

Engineers Design Group Inc
Structural Engineer
350 Main Street
Malden, MA 02148

Stefura Associates, Inc.
FF&E and Casework
77 North Washington Street
Boston, MA 02114

Crabtree McGrath Associates, Inc.
FF&E and Casework
161 West Main Street
Georgetown, MA 01833

Vanderweil Engineers, LLP
Mechanical Electrical Technology
Plumbing & Fire Protection Engineers
274 Summer Street
Boston, MA 02210

Fuss and O'Neill, Inc.
Hazardous Materials
108 Myrtle Street, Suite 502
Quincy, MA 02171

AM Fogarty
Cost Estimators
175 Derby St, Ste 5
Hingham, Massachusetts 02043

No.	Date	Note
		REVISIONS
No.	Date	Note
		ISSUE

Stamp

NITSCH PROJECT #13609
COMMONWEALTH OF MASSACHUSETTS
REGISTERED PROFESSIONAL ENGINEER
CIVIL
No. 48079
09/17/21

For Permitting Only

Key Plan

NORTH

Sheet Title

Segment A

CIVIL DETAILS

Drawn By: NJB	Project ID: 1914.00
Reviewed By: BMV/JEG	Scale: NOT TO SCALE
Issue Date: 06.14.2021	Plot Date: 06.11.2021

Sheet No.

C8.1

Nitsch Project #13609

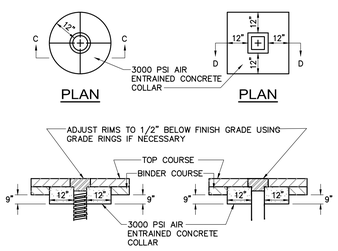

SECTION C-C ROUND

SECTION D-D SQUARE

NOTE:
ALL GATE BOX RIMS TO BE SET 1/2" BELOW FINISH GRADE AFTER BINDER COURSE OR LEVELING COURSE PAVEMENT HAS BEEN PLACED.

WATER GATE BOX DETAIL

NOT TO SCALE

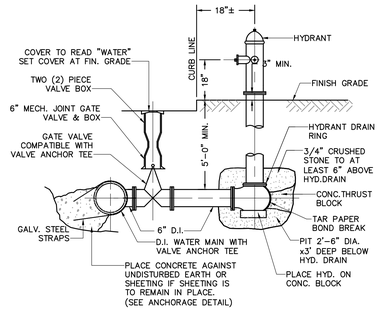

NOTE: ALL JOINTS ON HYDRANT BRANCH TO BE RESTRAINED JOINTS

FIRE HYDRANT DETAIL

NOT TO SCALE

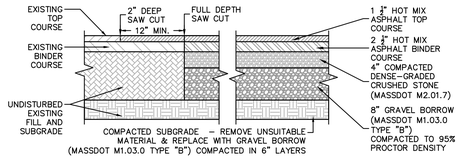

HOT MIX ASPHALT PAVING (TWO COURSES) DETAIL

NOT TO SCALE

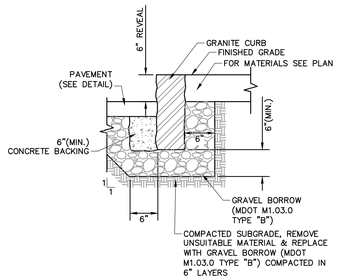

VERTICAL GRANITE CURB SETTING DETAIL

NOT TO SCALE

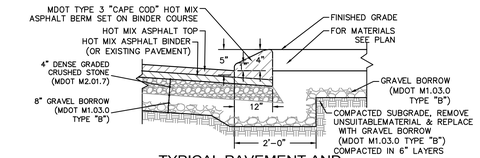

TYPICAL PAVEMENT AND HOT MIX ASPHALT BERM SECTION DETAIL

NOT TO SCALE

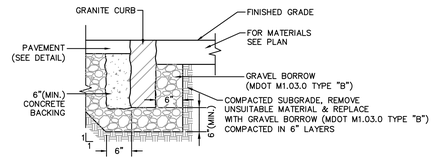

FLUSH GRANITE CURB SETTING DETAIL

NOT TO SCALE

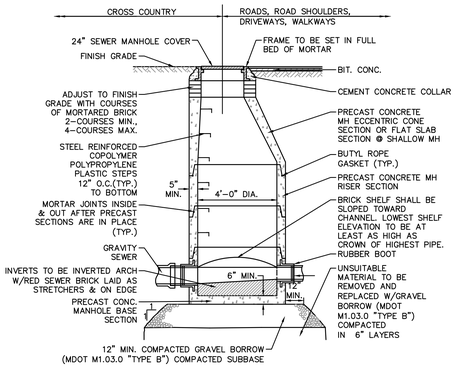

TYPICAL SEWER MANHOLE DETAIL

NOT TO SCALE

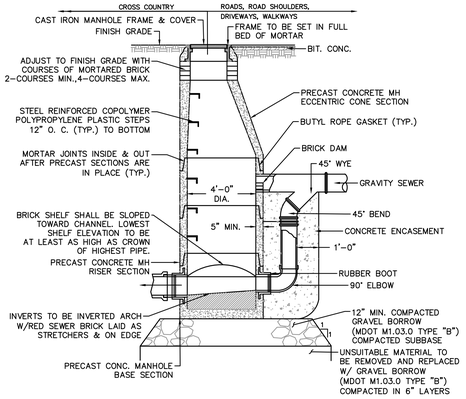

DROP MANHOLE DETAIL

NOT TO SCALE

IDENTIFI-CATION NUMBER	SIZE OF SIGN		TEXT
	WIDTH	HEIGHT	
R1-1	24"	24"	STOP
R5-1	24"	24"	DO NOT ENTER
R6-1L	36"	12"	ONE WAY
R7-8	12"	18"	RESERVED PARKING
R7-8A	18"	9"	VAN ACCESSIBLE

TRAFFIC SIGN SUMMARY

NOT TO SCALE

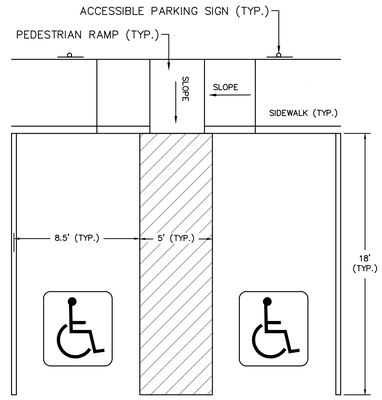

ACCESSIBLE PARKING DETAIL

NOT TO SCALE

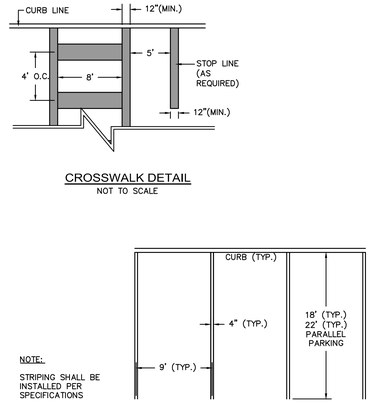

CROSSWALK DETAIL

NOT TO SCALE

NOTE:
STRIPING SHALL BE INSTALLED PER SPECIFICATIONS

TYPICAL PARKING STRIPING DETAIL

NOT TO SCALE

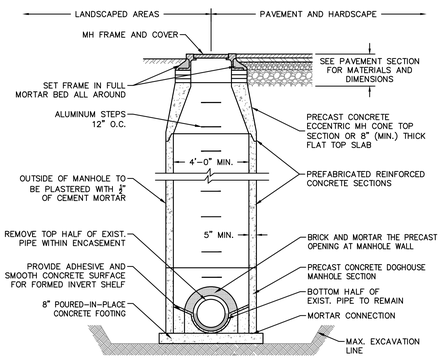

NOTES:
1. PREFABRICATED REINFORCED CONCRETE MANHOLE SECTIONS SHALL BE USED. THEY SHALL BE DESIGNED TO WITHSTAND AASHTO HS-20-44 LOADING.
2. SHOP DRAWINGS WILL BE REQUIRED TO BE SUBMITTED FOR APPROVAL. THE SHOP DRAWINGS SHALL BE STAMPED BY A PROFESSIONAL ENGINEER REGISTERED IN MASSACHUSETTS.

DOGHOUSE MANHOLE DETAIL

NOT TO SCALE

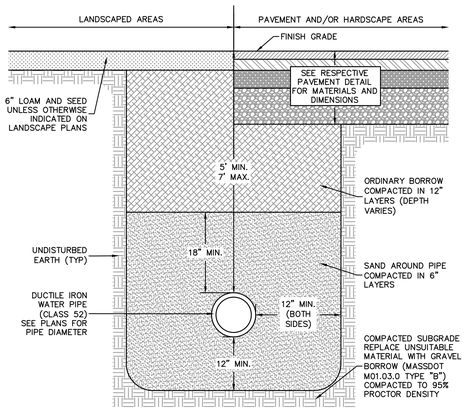

WATER TRENCH DETAIL

NOT TO SCALE

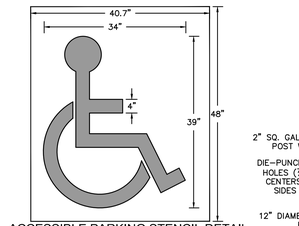

ACCESSIBLE PARKING STENCIL DETAIL

NOT TO SCALE

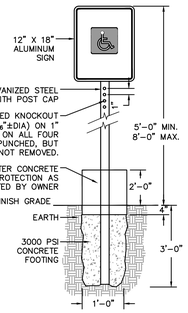

HANDICAPPED PARKING SIGNAGE DETAIL

NOT TO SCALE

SIGNS SHALL BE SET AT RIGHT ANGLES TO THE DIRECTION, AND FACING, THE TRAFFIC INTENDED TO SERVE.

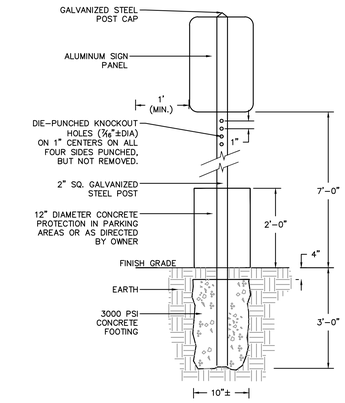

SIGN POST SETTING DETAIL

NOT TO SCALE
(SIGN PANEL UNDER 10 SF IN AREA)

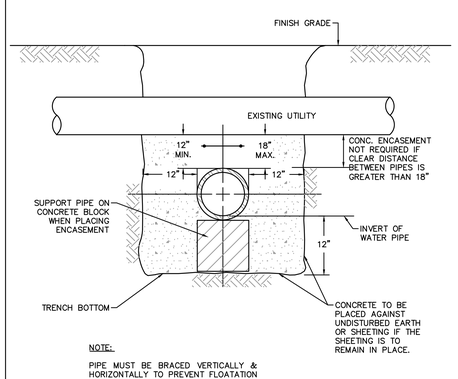

NOTE:
PIPE MUST BE BRACED VERTICALLY & HORIZONTALLY TO PREVENT FLOATATION DURING PLACEMENT OF CONCRETE

CONCRETE ENCASEMENT DETAIL AT UTILITY CROSSINGS

NOT TO SCALE

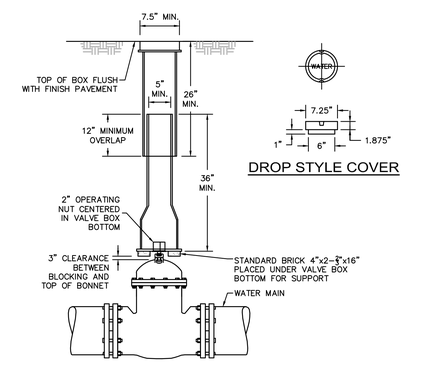

BOTTOM DETAIL

DROP STYLE COVER

NOTES:
1. ALL WATER MAINS SHOULD HAVE A MINIMUM DEPTH OF 5' FROM TOP OF PIPE TO FINISH GRADE.
2. COVER MUST BE MARKED "WATER".

GATE VALVE BOX DETAIL

NOT TO SCALE

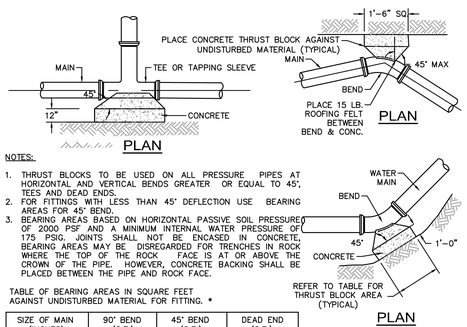

NOTES:
1. THRUST BLOCKS TO BE USED ON ALL PRESSURE PIPES AT HORIZONTAL AND VERTICAL BENDS GREATER OR EQUAL TO 45°, TEES AND DEAD ENDS.
2. FOR FITTINGS WITH LESS THAN 45° DEFLECTION USE BEARING AREAS FOR 45° BEND.
3. BEARING AREAS BASED ON HORIZONTAL PASSIVE SOIL PRESSURE OF 2000 PSF AND A MINIMUM INTERNAL WATER PRESSURE OF 175 PSIG. JOINTS SHALL NOT BE ENCASED IN CONCRETE, BEARING AREAS MAY BE DISREGARDED FOR TRENCHES IN ROCK WHERE THE TOP OF THE ROCK FACE IS AT OR ABOVE THE CROWN OF THE PIPE. HOWEVER, CONCRETE BACKING SHALL BE PLACED BETWEEN THE PIPE AND ROCK FACE.

TABLE OF BEARING AREAS IN SQUARE FEET AGAINST UNDISTURBED MATERIAL FOR FITTING. *

SIZE OF MAIN (INCHES)	90° BEND (S.F.)	45° BEND (S.F.)	DEAD END (S.F.)
4	2.3	1.3	1.6
6	4.7	2.5	3.3
8	8.0	4.5	6.0
12	17.0	9.5	12.0

THRUST BLOCK DETAILS

NOT TO SCALE

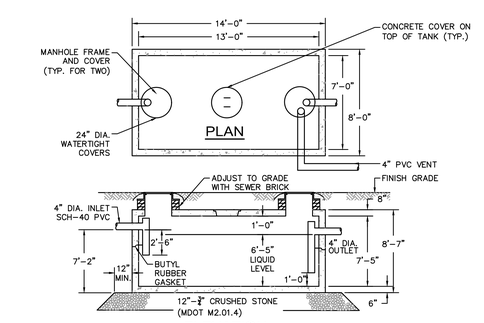

SPECIFICATIONS:

1. CONCRETE MINIMUM STRENGTH - 5,000 PSI @ 28 DAYS
2. STEEL REINFORCEMENT - ASTM A615 GR. 60, A185 OR A497 - 1" MIN. COVER
3. DESIGN LOADING - AASHTO HS20-44 - EARTH COVER 0 TO 5 FEET
4. WATER TABLE - 0 FEET
5. CONSTRUCTION JOINT - SEALED WITH 1" DIA. BUTYL RUBBER OR EQUIVALENT
6. TOTAL CAPACITY - 4,000 GALLONS

4,000 GALLON GREASE TRAP DETAIL

NOT TO SCALE

ASHLAND, MASSACHUSETTS Incorporated 1846
90 Concord Street, Ashland, MA

FLANSBURGH
77 NORTH WASHINGTON STREET
BOSTON, MA 02114-1910
FLANSBURGH.COM

Owner Project Manager

Compass Project Management, Inc.
Owners' Project Manager
One Edgewater Drive, Suite 204
Norwood, MA 02062

Consultants

Nitsch Engineering, Inc.
Land Survey/ Traffic/ Civil Engineers
2 Center Plaza
Boston, MA 02108

Stimson Studio
Landscape Architect
288 Norfolk Street
Cambridge, MA 02139

Engineers Design Group Inc
Structural Engineer
350 Main Street
Malden, MA 02148

Stefura Associates, Inc.
FF&E and Casework
77 North Washington Street
Boston, MA 02114

Crabtree McGrath Associates, Inc.
FF&E and Casework
161 West Main Street
Georgetown, MA 01833

Vanderweil Engineers, LLP
Mechanical Electrical Technology Plumbing & Fire Protection Engineers
274 Summer Street
Boston, MA 02210

Fuss and O'Neill, Inc.
Hazardous Materials
108 Myrtle Street, Suite 502
Quincy, MA 02171

AM Fogarty
Cost Estimators
175 Derby St, Ste 5
Hingham, Massachusetts 02043

No.	Date	Note
REVISIONS		
No.	Date	Note
ISSUE		

Stamp

NITSCH PROJECT #13609
COMMONWEALTH OF MASSACHUSETTS
JAMES E. GENTILUCCI
CIVIL
No. 48079
REGISTERED PROFESSIONAL ENGINEER
06/11/21

For Permitting Only

Key Plan

NORTH

Sheet Title

Segment A

CIVIL DETAILS

Drawn By: NJB	Project ID: 1914.00
Reviewed By: BMV/JEG	Scale: NOT TO SCALE
Issue Date: 06.14.2021	Plot Date: 06.11.2021

Sheet No.

C8.2

Nitsch Project #13609

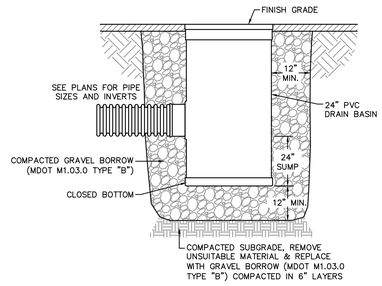

SECTION VIEW

NOTES:
1. FRAME AND GRATE SHALL BE DUCTILE IRON CONFORMING TO ASTM A536 GRADE 70-50-05.
2. 24" AREA DRAINS SHALL BE NYLOPLAST MODEL 2824 AS MANUFACTURED BY ADVANCED DRAINAGE SYSTEMS, INC., OR APPROVED EQUAL.
3. AREA DRAINS SHALL BE CUSTOM MANUFACTURED ACCORDING TO THE PLANS AND DETAIL.
4. CASTINGS SHALL BE FURNISHED WITH A BLACK PAINT.
5. SEE PLANS FOR LAYOUT AND ELEVATIONS OF DRAIN PIPES TO AREA DRAINS.

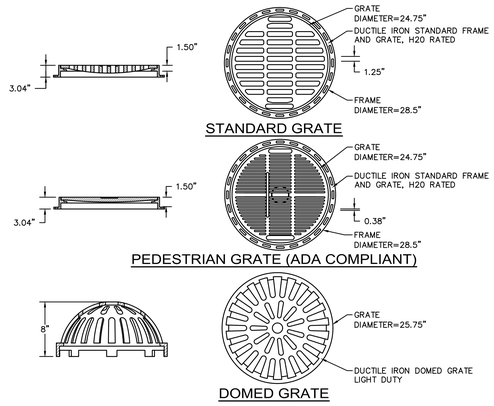

24" AREA DRAIN DETAIL

NOT TO SCALE

THE INSTALLED CHAMBER SYSTEM SHALL PROVIDE THE LOAD FACTORS SPECIFIED IN THE AASHTO LRFD BRIDGE DESIGN SPECIFICATIONS SECTION 12.12 FOR EARTH AND LIVE LOADS, WITH CONSIDERATION FOR IMPACT AND MULTIPLE VEHICLE PRESENCE.

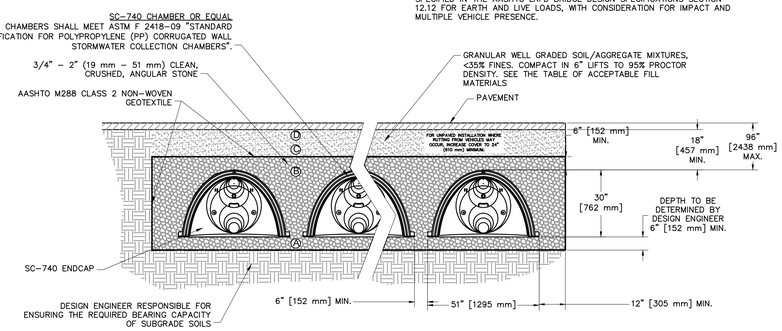

30" ARCH CHAMBER INFILTRATION SYSTEM DETAIL

NOT TO SCALE

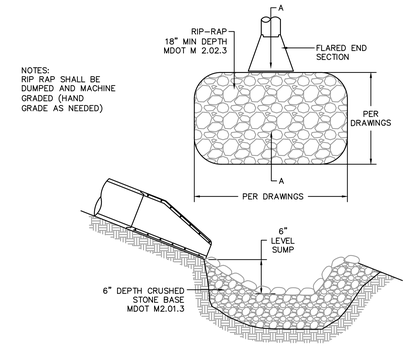

SECTION A-A

LEVEL SPREADER DETAIL

NOT TO SCALE

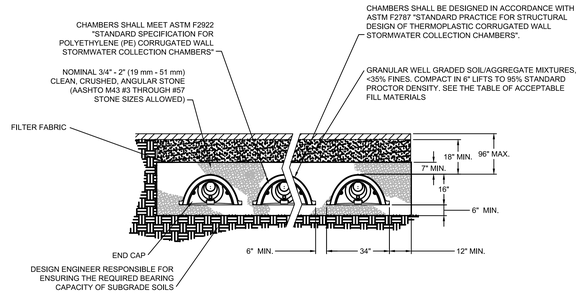

16" ARCH CHAMBER INFILTRATION SYSTEM DETAIL

NOT TO SCALE

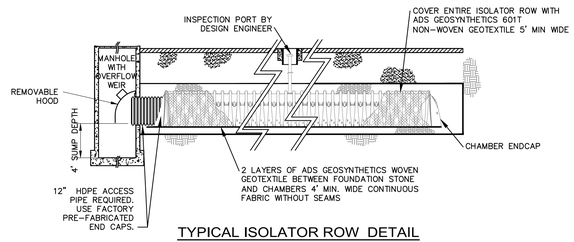

TYPICAL ISOLATOR ROW DETAIL

NOT TO SCALE

NOTES:

1. INSTALLATION OF SYSTEMS SHALL CONFORM TO MANUFACTURER SPECIFICATIONS AND IN ACCORDANCE WITH THE MANUFACTURER DESIGN MANUAL
2. THE INSTALLATION OF CHAMBERS SHALL BE IN ACCORDANCE WITH THE LATEST MANUFACTURER INSTALLATION INSTRUCTIONS
3. THE CONTRACTOR IS ADVISED TO REVIEW AND UNDERSTAND THE INSTALLATION INSTRUCTIONS PRIOR TO BEGINNING SYSTEM INSTALLATION.
4. CHAMBERS SHALL MEET THE DESIGN REQUIREMENTS AND LOAD FACTORS SPECIFIED IN SECTION 12.12 OF THE LATEST EDITION OF THE AASHTO LRFD BRIDGE DESIGN SPECIFICATIONS

ASHLAND, MASSACHUSETTS Incorporated 1846

90 Concord Street, Ashland, MA

FLANSBURGH

77 NORTH WASHINGTON STREET
BOSTON, MA 02114-1910

FLANSBURGH.COM

Owner Project Manager

Compass Project Management, Inc.
Owners' Project Manager
One Edgewater Drive, Suite 204
Norwood, MA 02062

Consultants

Nitsch Engineering, Inc.
Land Survey/ Traffic/ Civil Engineers
2 Center Plaza
Boston, MA 02108

Stimson Studio
Landscape Architect
288 Norfolk Street
Cambridge, MA 02139

Engineers Design Group Inc
Structural Engineer
350 Main Street
Malden, MA 02148

Stefura Associates, Inc.
FF&E and Casework
77 North Washington Street
Boston, MA 02114

Crabtree McGrath Associates, Inc.
FF&E and Casework
161 West Main Street
Georgetown, MA 01833

Vanderweil Engineers, LLP
Mechanical Electrical Technology Plumbing & Fire Protection Engineers
274 Summer Street
Boston, MA 02210

Fuss and O'Neill, Inc.
Hazardous Materials
108 Myrtle Street, Suite 502
Quincy, MA 02171

AM Fogarty
Cost Estimators
175 Derby St, Ste 5
Hingham, Massachusetts 02043

No.	Date	Note
		REVISIONS
No.	Date	Note
		ISSUE

Stamp

NITSCH PROJECT #13609

COMMONWEALTH OF MASSACHUSETTS — JAMES E. GRIMTHUSEN — CIVIL No. 48079 — REGISTERED PROFESSIONAL ENGINEER — 6/11/21

For Permitting Only

Key Plan

NORTH

Sheet Title

Segment A

CIVIL DETAILS

Drawn By: NJB	Project ID: 1914.00
Reviewed By: BMV/JEG	Scale: NOT TO SCALE
Issue Date: 06.14.2021	Plot Date: 06.11.2021

Sheet No.

C8.3

Nitsch Project #13609

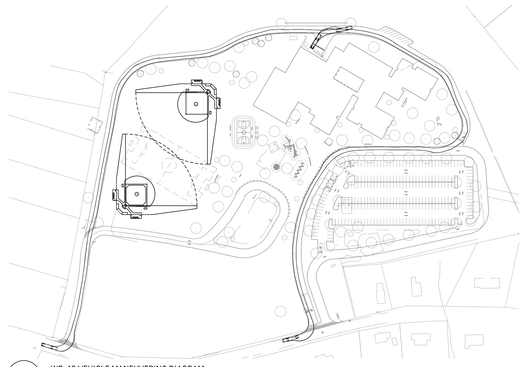

1 WB-40 VEHICLE MANEUVERING DIAGRAM
1" = 150'

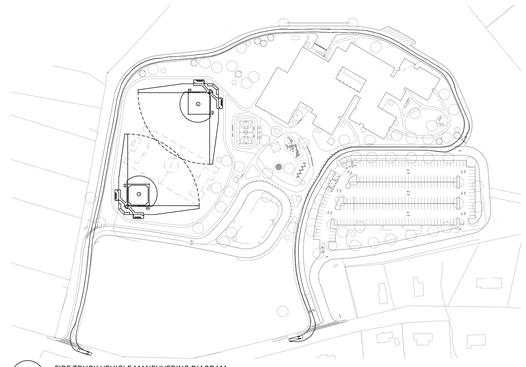

2 FIRE TRUCK VEHICLE MANEUVERING DIAGRAM
1" = 150'

L2.0, L3.0

L2.1, L3.1

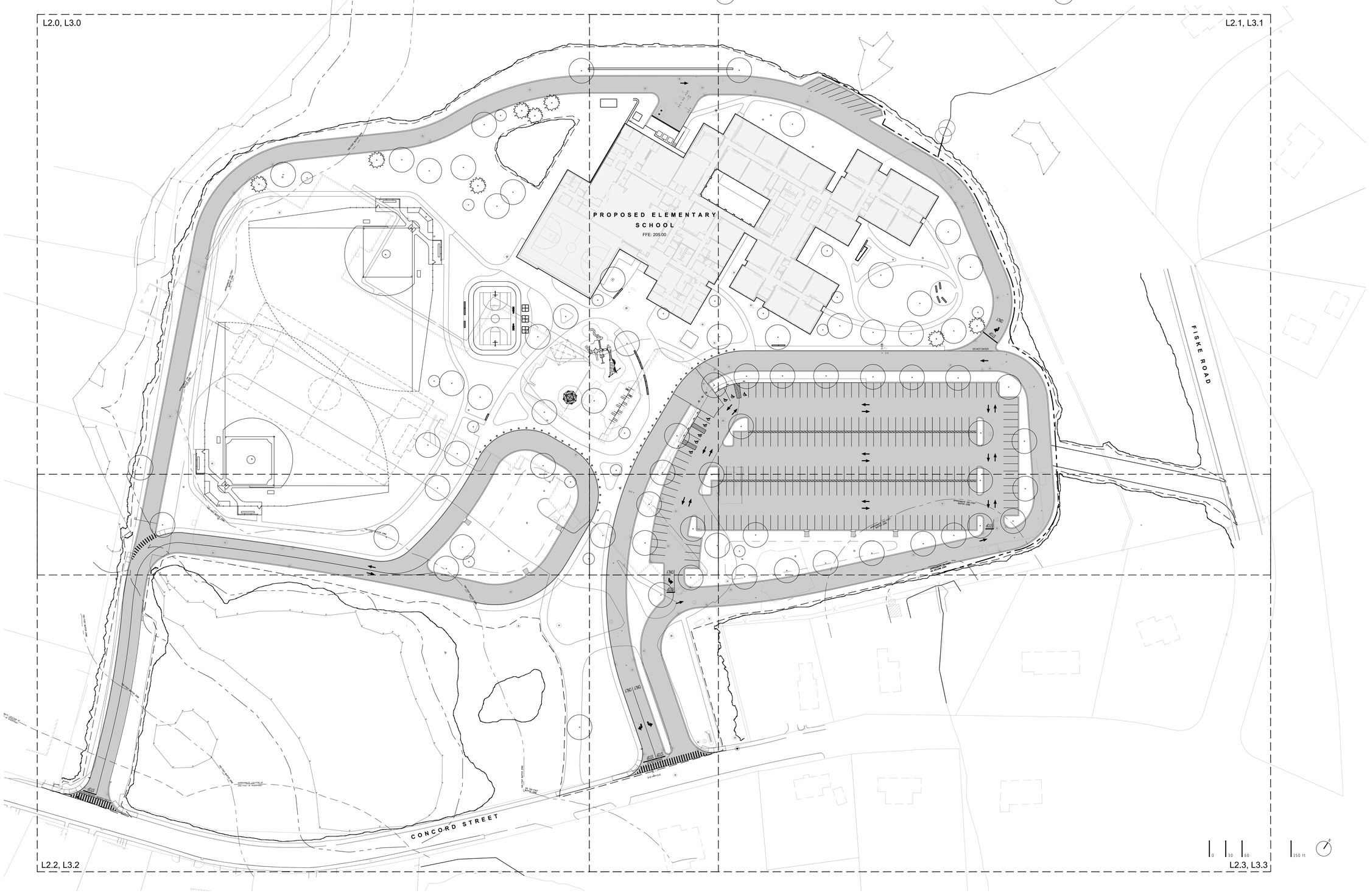

L2.2, L3.2

L2.3, L3.3

0 30 60 150 ft

90 Concord Street, Ashland, MA

FLANSBURGH

77 NORTH WASHINGTON STREET
BOSTON, MA 02114-1910

FLANSBURGH.COM

Owner Project Manager

Compass Project Management, Inc.
Owners' Project Manager
One Edgewater Drive, Suite 204
Norwood, MA 02062

Consultants

Nitsch Engineering, Inc.
Land Survey/ Traffic/ Civil Engineers
2 Center Plaza
Boston, MA 02108

Stimson Studio
Landscape Architect
288 Norfolk Street
Cambridge, MA 02139

Engineers Design Group Inc
Structural Engineer
350 Main Street
Malden, MA 02148

Stefura Associates, Inc.
FF&E and Casework
77 North Washington Street
Boston, MA 02114

Crabtree McGrath Associates, Inc.
FF&E and Casework
161 West Main Street
Georgetown, MA 01833

Vanderweil Engineers, LLP
Mechanical Electrical Technology Plumbing & Fire Protection Engineers
274 Summer Street
Boston, MA 02210

Fuss and O'Neill, Inc.
Hazardous Materials
108 Myrtle Street, Suite 502
Quincy, MA 02171

AM Fogarty
Cost Estimators
175 Derby St, Ste 5
Hingham, Massachusetts 02043

No.	Date	Note
		REVISIONS

No.	Date	Note
		ISSUE

Stamp

COMMONWEALTH OF MASSACHUSETTS
REGISTERED LANDSCAPE ARCHITECT
No. 972

For Permitting Only

Key Plan

Sheet Title

OVERALL SITE PLAN

Drawn By	Project ID 1914.00
Reviewed By	Scale 1" = 40'-0"
Issue Date 05.26.2021	Plot Date 05.26.2021
Sheet No.	

L1.00

MATERIALS LEGEND

PAVING

P1	BITUMINOUS CONCRETE PAVEMENT- VEHICULAR	5 L6.0
P2	BITUMINOUS CONCRETE PAVEMENT - PEDESTRIAN	4 L6.0
P3	CONCRETE PAVEMENT - PEDESTRIAN	1 L6.0
P4	CONCRETE PAVEMENT - VEHICULAR	2 L6.0
P5	EXPOSED AGGREGATE CONCRETE PAVEMENT	4 L6.0
P6	RESILIENT RUBBER PLAYGROUND SURFACE	7 L6.0
P7	STABILIZED STONEDUST WALKING PATH	6 L6.0
P8	BASKETBALL COURT SURFACING	
PA	PLANTING AREA	

EDGING

GC	GRANITE CURB	8 L6.0
CC	CAPE COD BERM	10 L6.0 / 11 L6.0
M	MAINTENANCE EDGE	

WALLS

RW	MODULAR BLOCK RETAINING WALL	12 L6.0
ES	BUILDING IDENTIFICATION SIGN	14 L6.1 / 16 L6.1
LD	LOADING DOCK (SEE ARCHITECTURAL DRAWINGS)	
CS	CONCRETE STEPS	

SITE FURNISHING DETAILS

BC	BASKETBALL COURT LAYOUT	
B	DECORATIVE BOLLARDS - 50 TOTAL (ALLOW 3 TO BE COLLAPSIBLE)	3 L6.1
S	STEEL PLAY STRUCTURE - SEE SPECIFICATIONS	
BB	BENCH (ALLOW 20 TOTAL)	6 L6.1
FP	40' HT. SPUN ALUMINUM FLAGPOLE	1 L6.1
F	CHAIN LINK FENCE - 6'	
MF	ORNAMENTAL METAL FENCE	11 L6.1
GR	WOOD GUARD RAIL	12 L6.1
CW	CEDAR TIMBER RAISED GARDEN BED	2 L6.1
BR	BICYCLE RACKS	8 L6.1
WR	TRASH AND RECYCLING RECEPTACLES (ALLOW 2 EACH)	7 L6.1

LAYOUT NOTES

1. Locate, protect, and maintain bench marks, monuments, control points, and project engineering reference points. Re-establish disturbed or destroyed items at Contractor's expense.
2. Examine the areas and conditions under which site work is performed. Report any discrepancies with the plan to the Landscape Architect. Do not proceed with the work until unsatisfactory conditions are corrected.
3. Report discrepancies in drawings or specifications to the Landscape Architect for clarifications and adjustments before commencing work. Any deviations or changes from these drawings without written acceptance of the Landscape Architect shall obsolve the Landscape Architect of any and all responsibility of said deviation and change.
4. Written dimensions take precedence over scaled dimensions.
5. Dimensions indicated on plans are for horizontal control and are accurate if measured on a level line. Measure horizontal control dimensions on a level line, not parallel with ground slope.
6. All dimensions taken from vertical surfaces, i.e. curbs & walls, are understood to be measured from the face of the vertical element unless otherwise specified.
7. All angles assumed to be 90° unless otherwise specified.

MATERIALS NOTES

1. Make transitions between changes in paving smooth and gradual with no sharp or abrupt changes unless otherwise shown.
2. Refer to landscape specifications for additional requirements.

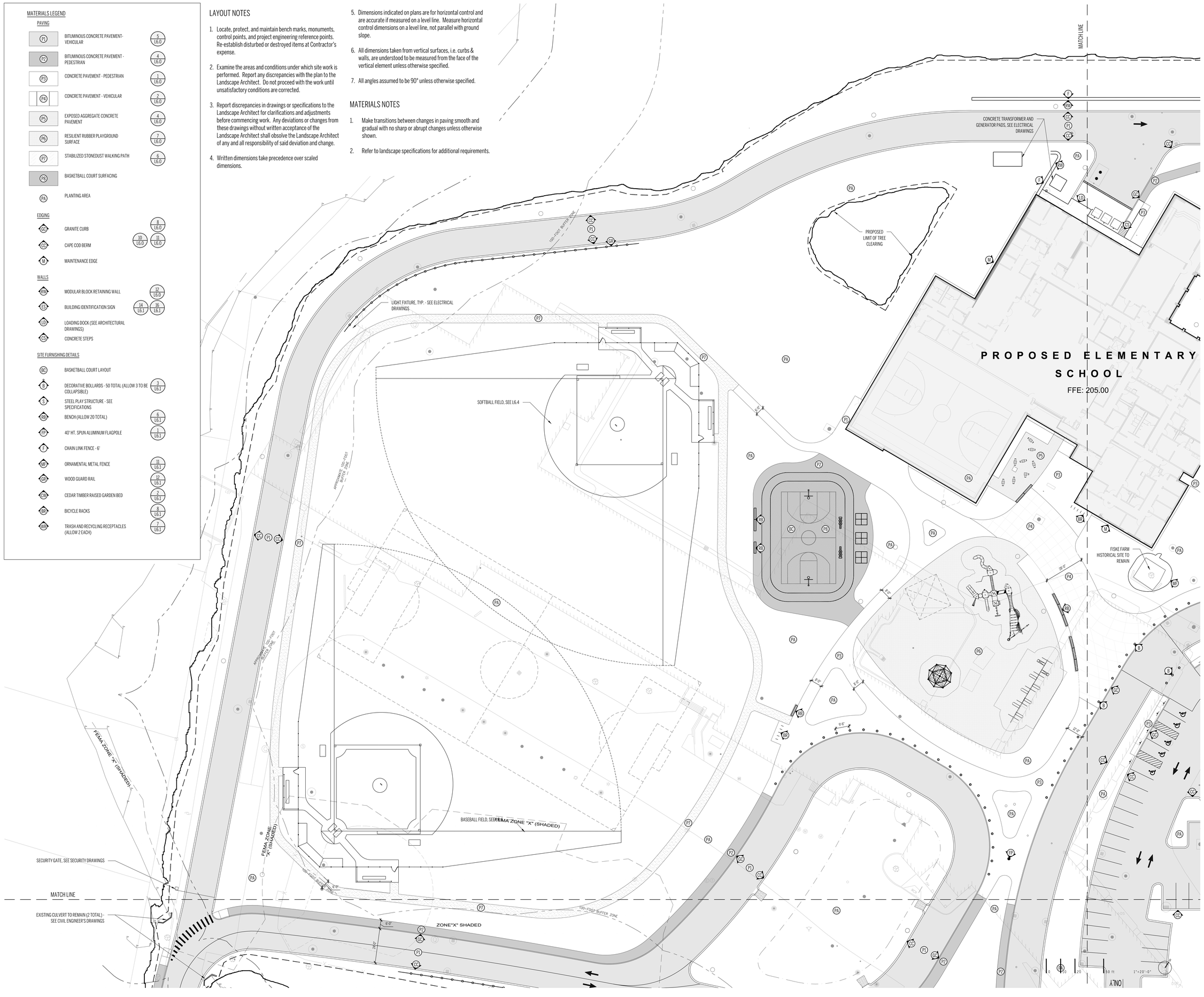

90 Concord Street, Ashland, MA

FLANSBURGH

77 NORTH WASHINGTON STREET
BOSTON, MA 02114-1910

FLANSBURGH.COM

Owner Project Manager

Compass Project Management, Inc.
Owners' Project Manager
One Edgewater Drive, Suite 204
Norwood, MA 02062

Consultants

Nitsch Engineering, Inc.
Land Survey/ Traffic/ Civil Engineers
2 Center Plaza
Boston, MA 02108

Stimson Studio
Landscape Architect
288 Norfolk Street
Cambridge, MA 02139

Engineers Design Group Inc
Structural Engineer
350 Main Street
Malden, MA 02148

Stefura Associates, Inc.
FF&E and Casework
77 North Washington Street
Boston, MA 02114

Crabtree McGrath Associates, Inc.
FF&E and Casework
161 West Main Street
Georgetown, MA 01833

Vanderweil Engineers, LLP
Mechanical Electrical Technology
Plumbing & Fire Protection Engineers
274 Summer Street
Boston, MA 02210

Fuss and O'Neill, Inc.
Hazardous Materials
108 Myrtle Street, Suite 502
Quincy, MA 02171

AM Fogarty
Cost Estimators
175 Derby St, Ste 5
Hingham, Massachusetts 02043

No.	Date	Note
		REVISIONS
No.	Date	Note
		ISSUE

Stamp

MASSACHUSETTS
STEPHEN C. STIMSON
No. 973
REGISTERED LANDSCAPE ARCHITECT

For Permitting Only

Key Plan

NORTH

Sheet Title

LAYOUT & MATERIALS PLAN 1

Drawn By	Project ID 1914.00
Reviewed By	Scale 1" = 20'-0"
Issue Date 05.26.2021	Plot Date 05.26.2021
Sheet No.	

L2.00

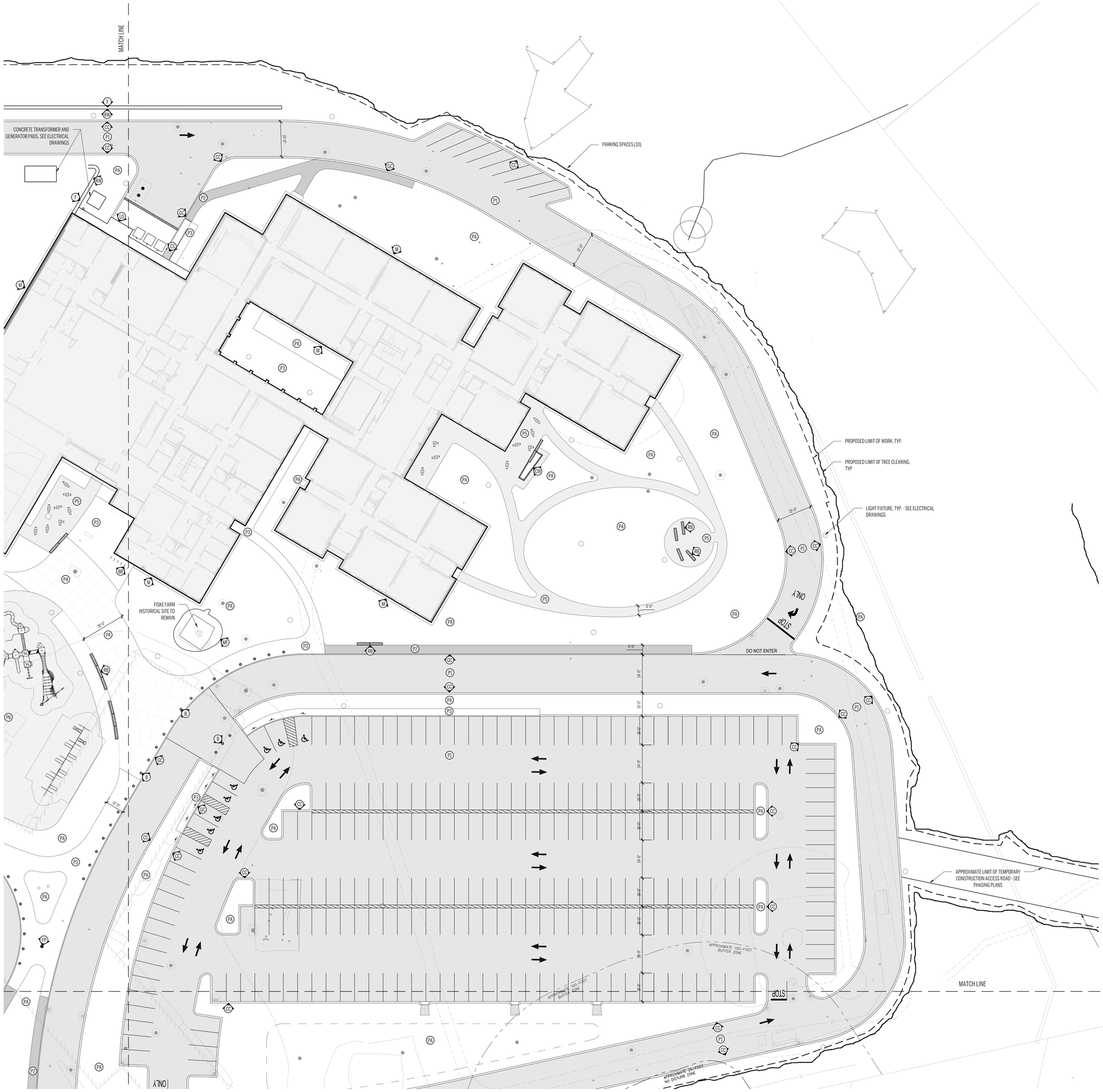

MATERIALS LEGEND

PAVING

P1	BITUMINOUS CONCRETE PAVEMENT-VEHICULAR	5 / L6.0
P2	BITUMINOUS CONCRETE PAVEMENT - PEDESTRIAN	4 / L6.0
P3	CONCRETE PAVEMENT - PEDESTRIAN	1 / L6.0
P4	CONCRETE PAVEMENT - VEHICULAR	2 / L6.0
P5	EXPOSED AGGREGATE CONCRETE PAVEMENT	4 / L6.0
P6	RESILIENT RUBBER PLAYGROUND SURFACE	7 / L6.0
P7	STABILIZED STONEDUST WALKING PATH	6 / L6.0
P8	BASKETBALL COURT SURFACING	
PA	PLANTING AREA	

EDGING

GC	GRANITE CURB	8 / L6.0
CC	CAPE COD BERM	10 / L6.0 ; 11 / L6.0
M	MAINTENANCE EDGE	

WALLS

RW	MODULAR BLOCK RETAINING WALL	12 / L6.0
ES	BUILDING IDENTIFICATION SIGN	14 / L6.1 ; 16 / L6.1
LD	LOADING DOCK (SEE ARCHITECTURAL DRAWINGS)	
CS	CONCRETE STEPS	

SITE FURNISHING DETAILS

BC	BASKETBALL COURT LAYOUT	
B	DECORATIVE BOLLARDS - 50 TOTAL (ALLOW 3 TO BE COLLAPSIBLE)	3 / L6.1
S	STEEL PLAY STRUCTURE - SEE SPECIFICATIONS	
BB	BENCH (ALLOW 20 TOTAL)	6 / L6.1
FP	40' HT. SPUN ALUMINUM FLAGPOLE	1 / L6.1
F	CHAIN LINK FENCE - 6'	
MF	ORNAMENTAL METAL FENCE	11 / L6.1
GR	WOOD GUARD RAIL	12 / L6.1
CM	CEDAR TIMBER RAISED GARDEN BED	2 / L6.1
BR	BICYCLE RACKS	8 / L6.1
WR	TRASH AND RECYCLING RECEPTACLES (ALLOW 2 EACH)	7 / L6.1

LAYOUT NOTES

1. Locate, protect, and maintain bench marks, monuments, control points, and project engineering reference points. Re-establish disturbed or destroyed items at Contractor's expense.
2. Examine the areas and conditions under which site work is performed. Report any discrepancies with the plan to the Landscape Architect. Do not proceed with the work until unsatisfactory conditions are corrected.
3. Report discrepancies in drawings or specifications to the Landscape Architect for clarifications and adjustments before commencing work. Any deviations or changes from these drawings without written acceptance of the Landscape Architect shall obsolve the Landscape Architect of any and all responsibility of said deviation and change.
4. Written dimensions take precedence over scaled dimensions.
5. Dimensions indicated on plans are for horizontal control and are accurate if measured on a level line. Measure horizontal control dimensions on a level line, not parallel with ground slope.
6. All dimensions taken from vertical surfaces, i.e. curbs & walls, are understood to be measured from the face of the vertical element unless otherwise specified.
7. All angles assumed to be 90° unless otherwise specified.

MATERIALS NOTES

1. Make transitions between changes in paving smooth and gradual with no sharp or abrupt changes unless otherwise shown.
2. Refer to landscape specifications for additional requirements.

ASHLAND, MASSACHUSETTS — Incorporated 1846

90 Concord Street, Ashland, MA

FLANSBURGH

77 NORTH WASHINGTON STREET
BOSTON, MA 02114-1910

FLANSBURGH.COM

Owner Project Manager

Compass Project Management, Inc.
Owners' Project Manager
One Edgewater Drive, Suite 204
Norwood, MA 02062

Consultants

Nitsch Engineering, Inc.
Land Survey/ Traffic/ Civil Engineers
2 Center Plaza
Boston, MA 02108

Stimson Studio
Landscape Architect
288 Norfolk Street
Cambridge, MA 02139

Engineers Design Group Inc
Structural Engineer
350 Main Street
Malden, MA 02148

Stefura Associates, Inc.
FF&E and Casework
77 North Washington Street
Boston, MA 02114

Crabtree McGrath Associates, Inc.
FF&E and Casework
161 West Main Street
Georgetown, MA 01833

Vanderweil Engineers, LLP
Mechanical Electrical Technology
Plumbing & Fire Protection Engineers
274 Summer Street
Boston, MA 02210

Fuss and O'Neill, Inc.
Hazardous Materials
108 Myrtle Street, Suite 502
Quincy, MA 02171

AM Fogarty
Cost Estimators
175 Derby St, Ste 5
Hingham, Massachusetts 02043

No.	Date	Note
		REVISIONS

No.	Date	Note
		ISSUE

Stamp

COMMONWEALTH OF MASSACHUSETTS — JASON C. PAUL — No. 973 — REGISTERED LANDSCAPE ARCHITECT

For Permitting Only

Key Plan

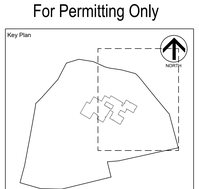

Sheet Title

LAYOUT & MATERIALS PLAN 2

Drawn By	Project ID: 1914.00
Reviewed By	Scale: 1" = 20'-0"
Issue Date: 05.26.2021	Plot Date: 05.26.2021
Sheet No.	

L2.10

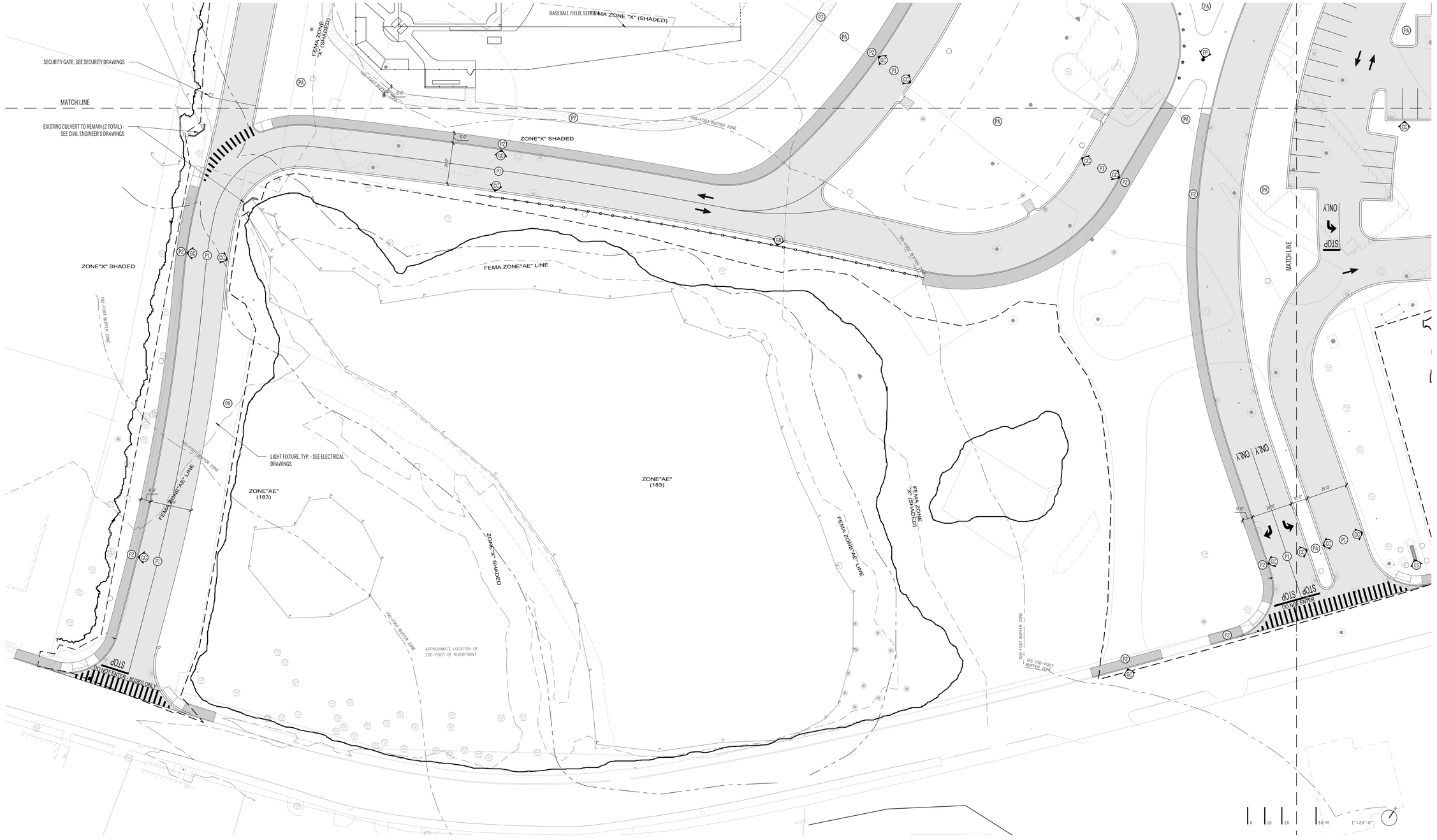

MATERIALS LEGEND

PAVING

P1	BITUMINOUS CONCRETE PAVEMENT-VEHICULAR	5 / L6.0
P2	BITUMINOUS CONCRETE PAVEMENT - PEDESTRIAN	4 / L6.0
P3	CONCRETE PAVEMENT - PEDESTRIAN	1 / L6.0
P4	CONCRETE PAVEMENT - VEHICULAR	2 / L6.0
P5	EXPOSED AGGREGATE CONCRETE PAVEMENT	4 / L6.0
P6	RESILIENT RUBBER PLAYGROUND SURFACE	7 / L6.0
P7	STABILIZED STONEDUST WALKING PATH	6 / L6.0
P8	BASKETBALL COURT SURFACING	
PA	PLANTING AREA	

EDGING

GC	GRANITE CURB	8 / L6.0
CC	CAPE COD BERM	10 / L6.0 and 11 / L6.0
M	MAINTENANCE EDGE	

WALLS

RW	MODULAR BLOCK RETAINING WALL	12 / L6.0
BS	BUILDING IDENTIFICATION SIGN	14 / L6.1 and 15 / L6.1
LD	LOADING DOCK (SEE ARCHITECTURAL DRAWINGS)	
CS	CONCRETE STEPS	

SITE FURNISHING DETAILS

BC	BASKETBALL COURT LAYOUT	
B	DECORATIVE BOLLARDS - 50 TOTAL (ALLOW 3 TO BE COLLAPSIBLE)	3 / L6.1
S	STEEL PLAY STRUCTURE - SEE SPECIFICATIONS	
BE	BENCH (ALLOW 20 TOTAL)	6 / L6.1
FP	40' HT. SPUN ALUMINUM FLAGPOLE	1 / L6.1
F	CHAIN LINK FENCE - 6'	
MF	ORNAMENTAL METAL FENCE	11 / L6.1
GR	WOOD GUARD RAIL	12 / L6.1
CH	CEDAR TIMBER RAISED GARDEN BED	2 / L6.1
BR	BICYCLE RACKS	8 / L6.1
WR	TRASH AND RECYCLING RECEPTACLES (ALLOW 2 EACH)	7 / L6.1

LAYOUT NOTES

1. Locate, protect, and maintain bench marks, monuments, control points, and project engineering reference points. Re-establish disturbed or destroyed items at Contractor's expense.
2. Examine the areas and conditions under which site work is performed. Report any discrepancies with the plan to the Landscape Architect. Do not proceed with the work until unsatisfactory conditions are corrected.
3. Report discrepancies in drawings or specifications to the Landscape Architect for clarifications and adjustments before commencing work. Any deviations or changes from these drawings without written acceptance of the Landscape Architect shall obsolve the Landscape Architect of any and all responsibility of said deviation and change.
4. Written dimensions take precedence over scaled dimensions.
5. Dimensions indicated on plans are for horizontal control and are accurate if measured on a level line. Measure horizontal control dimensions on a level line, not parallel with ground slope.
6. All dimensions taken from vertical surfaces, i.e. curbs & walls, are understood to be measured from the face of the vertical element unless otherwise specified.
7. All angles assumed to be 90° unless otherwise specified.

MATERIALS NOTES

1. Make transitions between changes in paving smooth and gradual with no sharp or abrupt changes unless otherwise shown.
2. Refer to landscape specifications for additional requirements.

ASHLAND, MASSACHUSETTS Incorporated 1846

90 Concord Street, Ashland, MA

FLANSBURGH

77 NORTH WASHINGTON STREET
BOSTON, MA 02114-1910

FLANSBURGH.COM

Owner Project Manager

Compass Project Management, Inc.
Owners' Project Manager
One Edgewater Drive, Suite 204
Norwood, MA 02062

Consultants

Nitsch Engineering, Inc.
Land Survey/ Traffic/ Civil Engineers
2 Center Plaza
Boston, MA 02108

Stimson Studio
Landscape Architect
288 Norfolk Street
Cambridge, MA 02139

Engineers Design Group Inc
Structural Engineer
350 Main Street
Malden, MA 02148

Stefura Associates, Inc.
FF&E and Casework
77 North Washington Street
Boston, MA 02114

Crabtree McGrath Associates, Inc.
FF&E and Casework
161 West Main Street
Georgetown, MA 01833

Vanderweil Engineers, LLP
Mechanical Electrical Technology
Plumbing & Fire Protection Engineers
274 Summer Street
Boston, MA 02210

Fuss and O'Neill, Inc.
Hazardous Materials
108 Myrtle Street, Suite 502
Quincy, MA 02171

AM Fogarty
Cost Estimators
175 Derby St, Ste 5
Hingham, Massachusetts 02043

No.	Date	Note
		REVISIONS

No.	Date	Note
		ISSUE

Stamp

MASSACHUSETTS — KEVIN C. STIMSON — No. 973 — REGISTERED LANDSCAPE ARCHITECT

For Permitting Only

Key Plan

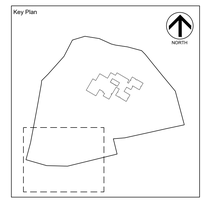

Sheet Title

LAYOUT & MATERIALS PLAN 3

Drawn By	Project ID 1914.00
Reviewed By	Scale 1" = 20'-0"
Issue Date 05.26.2021	Plot Date 05.26.2021
Sheet No.	

L2.20



MATERIALS LEGEND

PAVING

P1	BITUMINOUS CONCRETE PAVEMENT-VEHICULAR	5 / L6.0
P2	BITUMINOUS CONCRETE PAVEMENT - PEDESTRIAN	4 / L6.0
P3	CONCRETE PAVEMENT - PEDESTRIAN	1 / L6.0
P4	CONCRETE PAVEMENT - VEHICULAR	2 / L6.0
P5	EXPOSED AGGREGATE CONCRETE PAVEMENT	4 / L6.0
P6	RESILIENT RUBBER PLAYGROUND SURFACE	7 / L6.0
P7	STABILIZED STONEDUST WALKING PATH	6 / L6.0
P8	BASKETBALL COURT SURFACING	
PA	PLANTING AREA	

EDGING

GC	GRANITE CURB	8 / L6.0
CC	CAPE COD BERM	10 / L6.0 ; 11 / L6.0
M	MAINTENANCE EDGE	

WALLS

RW	MODULAR BLOCK RETAINING WALL	12 / L6.0
ES	BUILDING IDENTIFICATION SIGN	14 / L6.1 ; 16 / L6.1
LD	LOADING DOCK (SEE ARCHITECTURAL DRAWINGS)	
CS	CONCRETE STEPS	

SITE FURNISHING DETAILS

BC	BASKETBALL COURT LAYOUT	
B	DECORATIVE BOLLARDS - 50 TOTAL (ALLOW 3 TO BE COLLAPSIBLE)	3 / L6.1
S	STEEL PLAY STRUCTURE - SEE SPECIFICATIONS	
RB	BENCH (ALLOW 20 TOTAL)	6 / L6.1
FP	40' HT. SPUN ALUMINUM FLAGPOLE	1 / L6.1
F	CHAIN LINK FENCE - 6'	
MF	ORNAMENTAL METAL FENCE	11 / L6.1
GR	WOOD GUARD RAIL	12 / L6.1
CM	CEDAR TIMBER RAISED GARDEN BED	2 / L6.1
BR	BICYCLE RACKS	8 / L6.1
WR	TRASH AND RECYCLING RECEPTACLES (ALLOW 2 EACH)	7 / L6.1

LAYOUT NOTES

1. Locate, protect, and maintain bench marks, monuments, control points, and project engineering reference points. Re-establish disturbed or destroyed items at Contractor's expense.
2. Examine the areas and conditions under which site work is performed. Report any discrepancies with the plan to the Landscape Architect. Do not proceed with the work until unsatisfactory conditions are corrected.
3. Report discrepancies in drawings or specifications to the Landscape Architect for clarifications and adjustments before commencing work. Any deviations or changes from these drawings without written acceptance of the Landscape Architect shall obsolve the Landscape Architect of any and all responsibility of said deviation and change.
4. Written dimensions take precedence over scaled dimensions.
5. Dimensions indicated on plans are for horizontal control and are accurate if measured on a level line. Measure horizontal control dimensions on a level line, not parallel with ground slope.
6. All dimensions taken from vertical surfaces, i.e. curbs & walls, are understood to be measured from the face of the vertical element unless otherwise specified.
7. All angles assumed to be 90° unless otherwise specified.

MATERIALS NOTES

1. Make transitions between changes in paving smooth and gradual with no sharp or abrupt changes unless otherwise shown.
2. Refer to landscape specifications for additional requirements.

90 Concord Street, Ashland, MA

FLANSBURGH

77 NORTH WASHINGTON STREET
BOSTON, MA 02114-1910

FLANSBURGH.COM

Owner Project Manager

Compass Project Management, Inc.
Owners' Project Manager
One Edgewater Drive, Suite 204
Norwood, MA 02062

Consultants

Nitsch Engineering, Inc.
Land Survey/ Traffic/ Civil Engineers
2 Center Plaza
Boston, MA 02108

Stimson Studio
Landscape Architect
288 Norfolk Street
Cambridge, MA 02139

Engineers Design Group Inc
Structural Engineer
350 Main Street
Malden, MA 02148

Stefura Associates, Inc.
FF&E and Casework
77 North Washington Street
Boston, MA 02114

Crabtree McGrath Associates, Inc.
FF&E and Casework
161 West Main Street
Georgetown, MA 01833

Vanderweil Engineers, LLP
Mechanical Electrical Technology
Plumbing & Fire Protection Engineers
274 Summer Street
Boston, MA 02210

Fuss and O'Neill, Inc.
Hazardous Materials
108 Myrtle Street, Suite 502
Quincy, MA 02171

AM Fogarty
Cost Estimators
175 Derby St, Ste 5
Hingham, Massachusetts 02043

No.	Date	Note
REVISIONS		

No.	Date	Note
ISSUE		

Stamp

MASSACHUSETTS REGISTERED LANDSCAPE ARCHITECT NO. 972 KRISTEN C. STIMSON

For Permitting Only

Key Plan

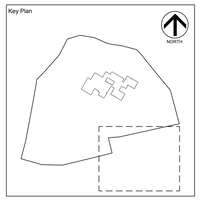

Sheet Title

LAYOUT & MATERIALS PLAN 4

Drawn By	Project ID: 1914.00
Reviewed By	Scale: 1" = 20'-0"
Issue Date: 05.26.2021	Plot Date: 05.26.2021
Sheet No.	

L2.30

GRADING NOTES

1. Install staked haybale siltation fence at edge of proposed grading as shown. Maintain haybale fence in good condition throughout project.
2. The locations of utilities shown on the plan are approximate. The contractor shall call Dig-Safe to verify the precise location of all utilities on-site before initiating demolition activities and protect existing utilities throughout construction. Any utilities damaged by construction activities will be repaired by the contractor at no cost to the owner.
3. Provide samples of materials proposed for use for the review of the Landscape Architect, including fill, topsoil, planting soil, and pavements. Suitable excavated materials removed to accommodate new construction may be used as fill material subject to the approval of the Landscape Architect. Soil test reports for topsoil shall be provided by the contractor through the University of Massachusetts soil testing laboratory.
4. Promptly notify the Landscape Architect of unexpected sub-surface conditions. Contractor to set grade stakes showing lines and elevations for review and approval by the Landscape Architect prior to rough grading.
5. Perform grading within contract Limits of Construction, including adjacent transition areas, to new elevations, levels, profiles, and contours indicated. Provide subgrade surfaces parallel to finished surface grades. Provide uniform levels and slopes between new elevations and existing grades. Grade surfaces to assure areas drain away from structures and to prevent ponding and pockets of surface drainage.
6. Topsoil to be installed shall be natural, friable, fertile soil characteristic of productive soil in the vicinity, reasonably free of stones, clay lumps, roots, and other foreign matter. Do not use muddy topsoil. Place during dry weather. Allow for 6" average depth of topsoil screened for lawn areas, and 12" depth at planting areas, except as otherwise indicated on the drawings.
7. Fine grade topsoil eliminating rough and low areas to ensure positive drainage. Maintain levels, profiles, and contours of subgrades.
8. Protect finish graded areas from traffic and erosion. Keep free of trash and debris. Repair and re-establish grades in settled,eroded, and damaged areas. Where completed areas are disturbed by construction operations or adverse weather, scarify, re-shape, and compact to required density.
9. Upon completion of earthwork operation, clean areas within contract limits, remove tools, and equipment. Provide site clear, clean, free of debris, and suitable for further site work operations.

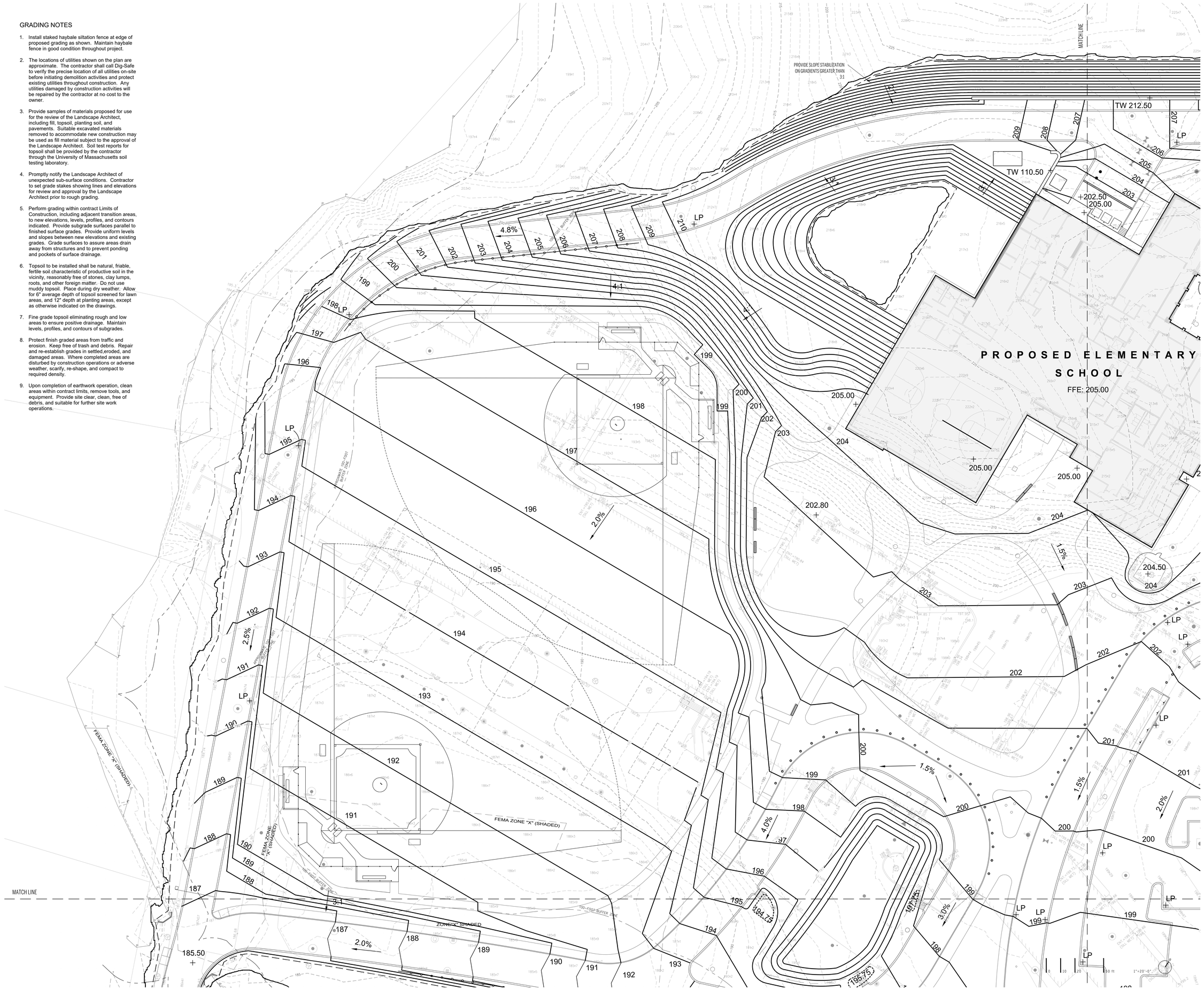

90 Concord Street, Ashland, MA

FLANSBURGH

77 NORTH WASHINGTON STREET
BOSTON, MA 02114-1910
FLANSBURGH.COM

Owner Project Manager

Compass Project Management, Inc.
Owners' Project Manager
One Edgewater Drive, Suite 204
Norwood, MA 02062

Consultants

Nitsch Engineering, Inc.
Land Survey/ Traffic/ Civil Engineers
2 Center Plaza
Boston, MA 02108

Stimson Studio
Landscape Architect
288 Norfolk Street
Cambridge, MA 02139

Engineers Design Group Inc
Structural Engineer
350 Main Street
Malden, MA 02148

Stefura Associates, Inc.
FF&E and Casework
77 North Washington Street
Boston, MA 02114

Crabtree McGrath Associates, Inc.
FF&E and Casework
161 West Main Street
Georgetown, MA 01833

Vanderweil Engineers, LLP
Mechanical Electrical Technology Plumbing & Fire Protection Engineers
274 Summer Street
Boston, MA 02210

Fuss and O'Neill, Inc.
Hazardous Materials
108 Myrtle Street, Suite 502
Quincy, MA 02171

AM Fogarty
Cost Estimators
175 Derby St, Ste 5
Hingham, Massachusetts 02043

No.	Date	Note
		REVISIONS

No.	Date	Note
		ISSUE

Stamp

For Permitting Only

Key Plan

Sheet Title

GRADING PLAN 1

Drawn By	Project ID 1914.00
Reviewed By	Scale 1" = 20'-0"
Issue Date 05.26.2021	Plot Date 05.26.2021
Sheet No.	

L3.00

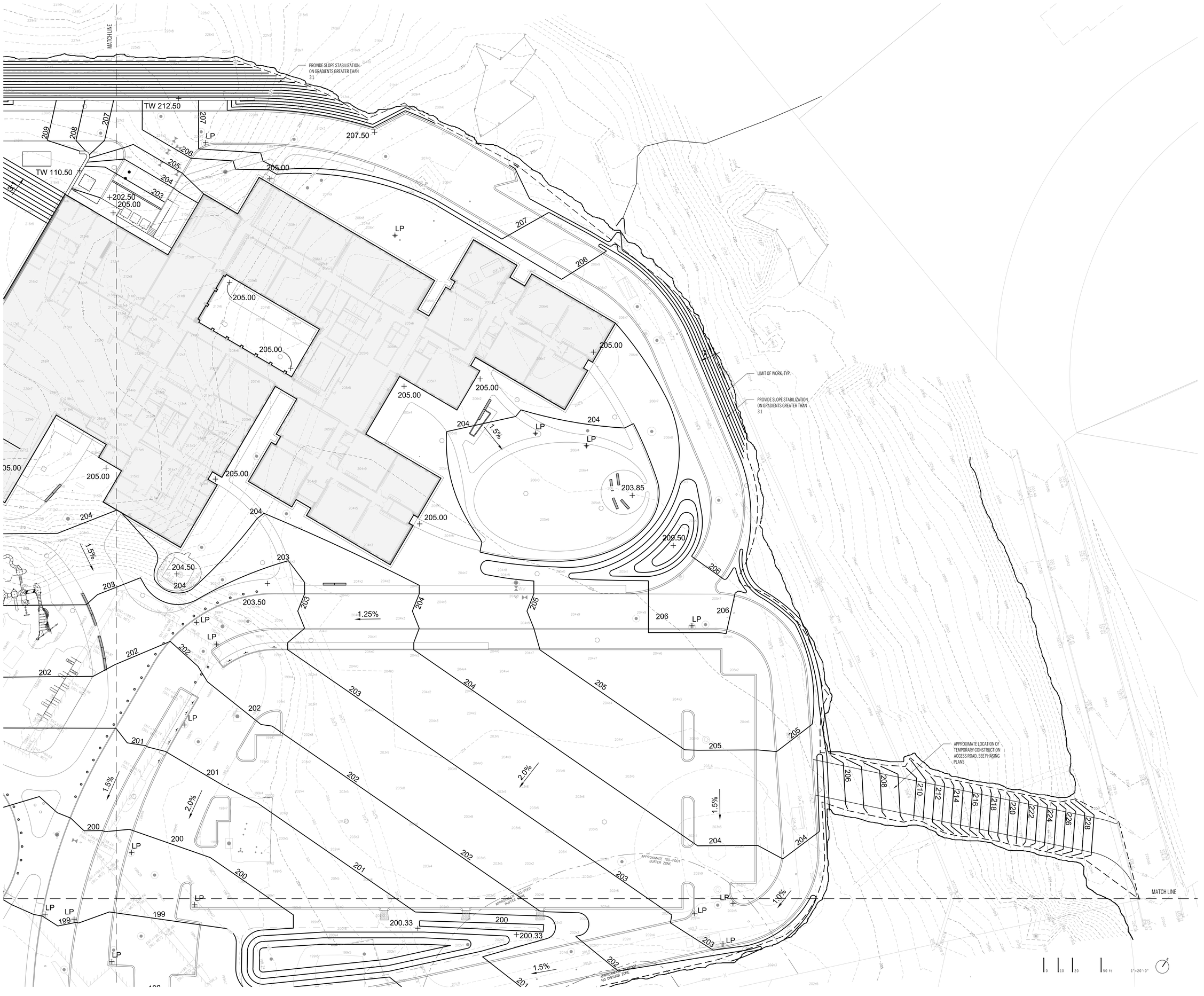

ASHLAND, MASSACHUSETTS
Incorporated 1846

90 Concord Street, Ashland, MA

FLANSBURGH

77 NORTH WASHINGTON STREET
BOSTON, MA 02114-1910

FLANSBURGH.COM

Owner Project Manager

Compass Project Management, Inc.
Owners' Project Manager
One Edgewater Drive, Suite 204
Norwood, MA 02062

Consultants

Nitsch Engineering, Inc.
Land Survey/ Traffic/ Civil Engineers
2 Center Plaza
Boston, MA 02108

Stimson Studio
Landscape Architect
288 Norfolk Street
Cambridge, MA 02139

Engineers Design Group Inc
Structural Engineer
350 Main Street
Malden, MA 02148

Stefura Associates, Inc.
FF&E and Casework
77 North Washington Street
Boston, MA 02114

Crabtree McGrath Associates, Inc.
FF&E and Casework
161 West Main Street
Georgetown, MA 01833

Vanderweil Engineers, LLP
Mechanical Electrical Technology Plumbing & Fire Protection Engineers
274 Summer Street
Boston, MA 02210

Fuss and O'Neill, Inc.
Hazardous Materials
108 Myrtle Street, Suite 502
Quincy, MA 02171

AM Fogarty
Cost Estimators
175 Derby St, Ste 5
Hingham, Massachusetts 02043

No.	Date	Note
		REVISIONS

No.	Date	Note
		ISSUE

Stamp

COMMONWEALTH OF MASSACHUSETTS
JOSEPH C. STIMSON
REGISTERED LANDSCAPE ARCHITECT
NO. 973

For Permitting Only

Key Plan

Sheet Title

GRADING PLAN 2

Drawn By	Project ID 1914.00
Reviewed By	Scale 1" = 20'-0"
Issue Date 05.26.2021	Plot Date 05.26.2021
Sheet No.	

L3.10



ASHLAND, MASSACHUSETTS
Incorporated 1846

90 Concord Street, Ashland, MA

FLANSBURGH

77 NORTH WASHINGTON STREET
BOSTON, MA 02114-1910

FLANSBURGH.COM

Owner Project Manager

Compass Project Management, Inc.
Owners' Project Manager
One Edgewater Drive, Suite 204
Norwood, MA 02062

Consultants

Nitsch Engineering, Inc.
Land Survey/ Traffic/ Civil Engineers
2 Center Plaza
Boston, MA 02108

Stimson Studio
Landscape Architect
288 Norfolk Street
Cambridge, MA 02139

Engineers Design Group Inc
Structural Engineer
350 Main Street
Malden, MA 02148

Stefura Associates, Inc.
FF&E and Casework
77 North Washington Street
Boston, MA 02114

Crabtree McGrath Associates, Inc.
FF&E and Casework
161 West Main Street
Georgetown, MA 01833

Vanderweil Engineers, LLP
Mechanical Electrical Technology
Plumbing & Fire Protection Engineers
274 Summer Street
Boston, MA 02210

Fuss and O'Neill, Inc.
Hazardous Materials
108 Myrtle Street, Suite 502
Quincy, MA 02171

AM Fogarty
Cost Estimators
175 Derby St, Ste 5
Hingham, Massachusetts 02043

No.	Date	Note
		REVISIONS

No.	Date	Note
		ISSUE

Stamp

MASSACHUSETTS
REGISTERED LANDSCAPE ARCHITECT
NO. 972

For Permitting Only

Key Plan

NORTH

Sheet Title

GRADING PLAN 3

Drawn By	Project ID 1914.00
Reviewed By	Scale 1" = 20'-0"
Issue Date 05.26.2021	Plot Date 05.26.2021

Sheet No.

L3.20

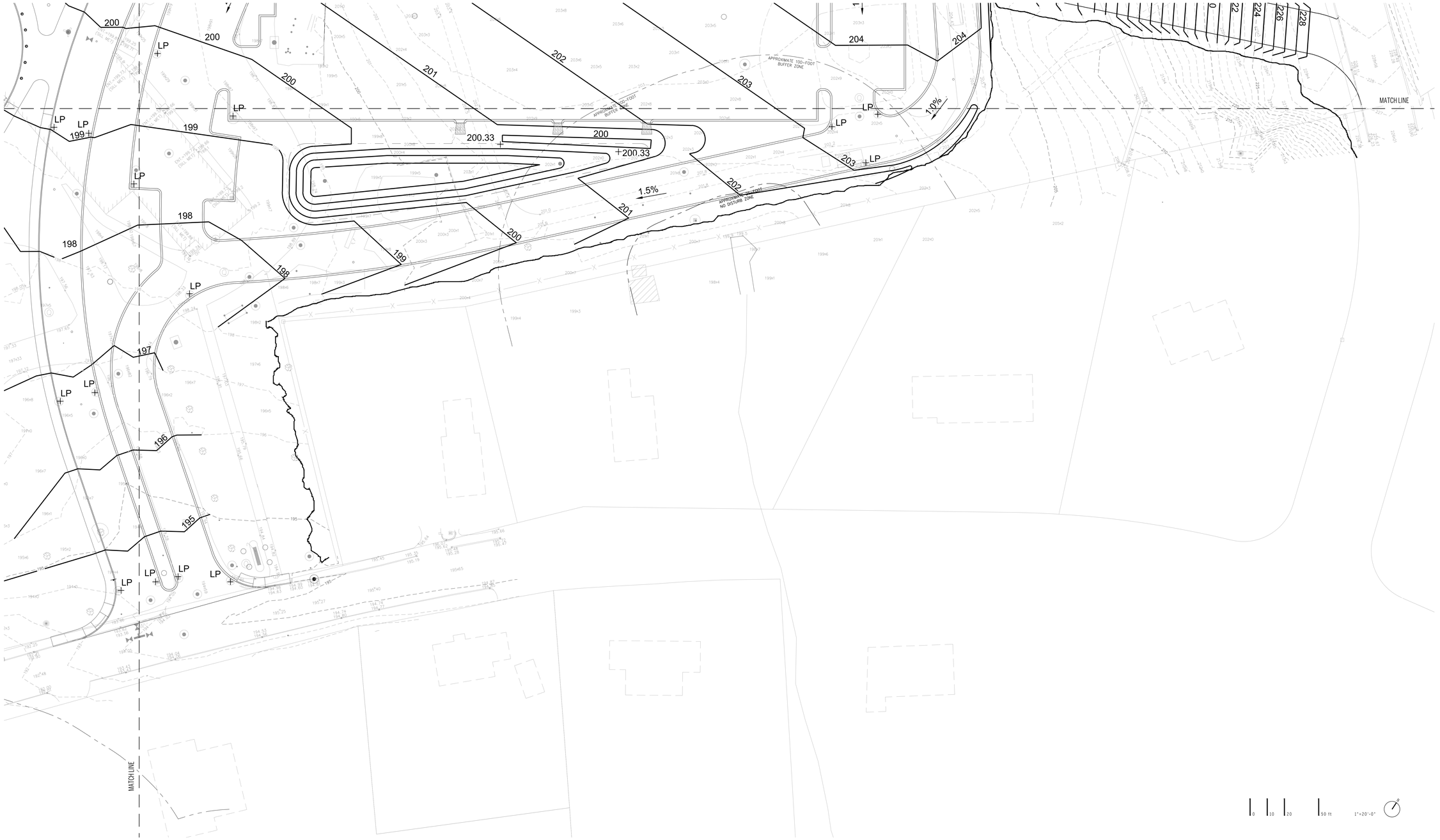

ASHLAND, MASSACHUSETTS
Incorporated 1846

90 Concord Street, Ashland, MA

FLANSBURGH

77 NORTH WASHINGTON STREET
BOSTON, MA 02114-1910

FLANSBURGH.COM

Owner Project Manager

Compass Project Management, Inc.
Owners' Project Manager
One Edgewater Drive, Suite 204
Norwood, MA 02062

Consultants

Nitsch Engineering, Inc.
Land Survey/ Traffic/ Civil Engineers
2 Center Plaza
Boston, MA 02108

Stimson Studio
Landscape Architect
288 Norfolk Street
Cambridge, MA 02139

Engineers Design Group Inc
Structural Engineer
350 Main Street
Malden, MA 02148

Stefura Associates, Inc.
FF&E and Casework
77 North Washington Street
Boston, MA 02114

Crabtree McGrath Associates, Inc.
FF&E and Casework
161 West Main Street
Georgetown, MA 01833

Vanderweil Engineers, LLP
Mechanical Electrical Technology
Plumbing & Fire Protection Engineers
274 Summer Street
Boston, MA 02210

Fuss and O'Neill, Inc.
Hazardous Materials
108 Myrtle Street, Suite 502
Quincy, MA 02171

AM Fogarty
Cost Estimators
175 Derby St, Ste 5
Hingham, Massachusetts 02043

No.	Date	Note
REVISIONS		

No.	Date	Note
ISSUE		

Stamp



For Permitting Only

Key Plan

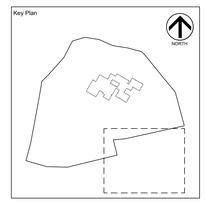

Sheet Title

GRADING PLAN 4

Drawn By	Project ID 1914.00
Reviewed By	Scale 1" = 20'-0"
Issue Date 05.26.2021	Plot Date 05.26.2021
Sheet No. L3.30	



PLANTING NOTES

1. Planting contractor shall visit site prior to submitting bid to become completely familiar with site conditions.
2. No planting will be installed until all grading and construction has been completed in immediate area.
3. Contractor to verify all utilities on property and to protect all utilities during excavation for plants.
4. If there is a discrepancy between the number of plants shown on the plan and the number of plants shown in plant list, the number of plants shown on plan will take precedence.
5. All container material to be grown in container a minimum of 6 months.
6. All material shall comply with the latest edition of the American Standard for Nursery Stock, American Association of Nurseryman.
7. Contractor shall repair all damage to property from planting operations at no cost to the owner.
8. Contractor shall guarantee new plant material through one calendar year from time of provisional acceptance.
9. The Landscape Architect will tag all plants at the nursery and inspect them after delivery to the site. All plant materials shall be inspected by the Landscape Architect on site prior to installation.
10. All proposed plants shall be located carefully as shown on the plans and the placements shall be approved by Landscape Architect before the plants are installed.
11. Spacing of plants is to be based on measurements taken parallel to the ground plane.
12. All disturbed areas not to be paved or planted shall be loamed and seeded as shown. See specifications for seed mix.
13. Staking and guying shall be determined by the Landscape Architect on a tree by tree basis. For pricing purposes, provide a per tree unit cost for staking and guying. If staking and guying is required, remove tree wrap, stakes, and guy wires at end of first growing season.
14. For tree planting in lawn areas, any disturbed lawn shall be loamed and seeded as necessary.
15. Landscape Architect to flag trees to be protected on site.

SYM	BOTANICAL NAME	COMMON NAME	SIZE	QTY
RESTORATION PLANTING				
	Restoration Planting, Disturbed area planted with 1" caliper restoration trees 8' on center underseeded with native restoration seed mix.			
BIORETENTION SEED MIX				
	Bioretention Seed Mix, 2" plugs 18" on center. Side Slopes seeded with wetland seed mix.			
LAWN SEED MIX				
	Lawn Seed Mix			

SYM	BOTANICAL NAME	COMMON NAME	SIZE	QTY
TREE				
EVERGREEN				9
	Abies balsamea	Balsam Fir	7' H	
	Pinus nigra	Black Pine	7' H	
	Pinus strobus	White pine	7' H	
DECIDUOUS				68
	Acer rubrum	Red Maple	4" Cal.	
	Acer saccharum	Sugar Maple	4" Cal.	
	Betula papyrifera	Paper Birch	4" Cal.	
	Liquidambar styraciflua	Sweet Gum	4" Cal.	
	Metasequoia glyptostroboides	Dawn Redwood	4" Cal.	
	Larix laricina	American Larch	4" Cal.	
	Nyssa sylvatica	Tupelo	4" Cal.	
	Quercus bicolor	Swamp White Oak	4" Cal.	
	Quercus rubra	Red Oak	4" Cal.	
	Ulmus americana	American Elm	4" Cal.	
UNDERSTORY				17
	Amelanchier canadensis	Serviceberry	3" Cal.	
	Cercis canadensis	Eastern Redbud	3" Cal.	
	Cornus florida	Flowering Dogwood	3" Cal.	
	Magnolia stellata	Star Magnolia	3" Cal.	
	Malus x floribunda	Flowering Crabapple	3" Cal.	
	Prunus x incam	Okame Cherry	3" Cal.	
SHRUBS				900
	Comptonia perigina	Sweet Fern	18"-24"	
	Hamamelis virginiana	Witch Hazel	18"-24"	
	Ilex verticillata	Winterberry Holly	18"-24"	
	Rhus aromatica 'Grolow'	Fragrant Sumac	18"-24"	
	Hydrangea arborescens	Smooth Hydrangea	18"-24"	
	Lindera benzoin	Spicebush	18"-24"	
	Vaccinium corymbosum	Highbush Blueberry	18"-24"	
PERENNIALS / GRASSES				1,500
	Eragrostis spectabilis	Purple Love Grass	#1	
	Juncus effusus	Soft Rush	#1	
	Molinia caerulea	Moore Grass	#1	
	Schizachyrium scoparium	Little Bluestem	#1	
	Sporobolis heterolepsis	Prairie Dropseed	#1	
	Sorghastrum nutans	Indian Grass	#1	

ASHLAND, MASSACHUSETTS
Incorporated 1846
90 Concord Street, Ashland, MA

FLANSBURGH
77 NORTH WASHINGTON STREET
BOSTON, MA 02114-1910
FLANSBURGH.COM

Owner Project Manager

Compass Project Management, Inc.
Owners' Project Manager
One Edgewater Drive, Suite 204
Norwood, MA 02062

Consultants

Nitsch Engineering, Inc.
Land Survey/ Traffic/ Civil Engineers
2 Center Plaza
Boston, MA 02108

Stimson Studio
Landscape Architect
288 Norfolk Street
Cambridge, MA 02139

Engineers Design Group Inc
Structural Engineer
350 Main Street
Malden, MA 02148

Stefura Associates, Inc.
FF&E and Casework
77 North Washington Street
Boston, MA 02114

Crabtree McGrath Associates, Inc.
FF&E and Casework
161 West Main Street
Georgetown, MA 01833

Vanderweil Engineers, LLP
Mechanical Electrical Technology
Plumbing & Fire Protection Engineers
274 Summer Street
Boston, MA 02210

Fuss and O'Neill, Inc.
Hazardous Materials
108 Myrtle Street, Suite 502
Quincy, MA 02171

AM Fogarty
Cost Estimators
175 Derby St, Ste 5
Hingham, Massachusetts 02043

No.	Date	Note
		REVISIONS

No.	Date	Note
		ISSUE

Stamp



For Permitting Only

Key Plan

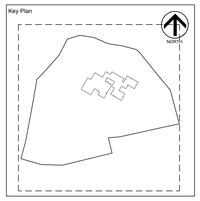

Sheet Title

PLANTING PLAN

Drawn By	Project ID 1914.00
Reviewed By	Scale 1" = 40'-0"
Issue Date 05.26.2021	Plot Date 05.26.2021

Sheet No.

L4.00

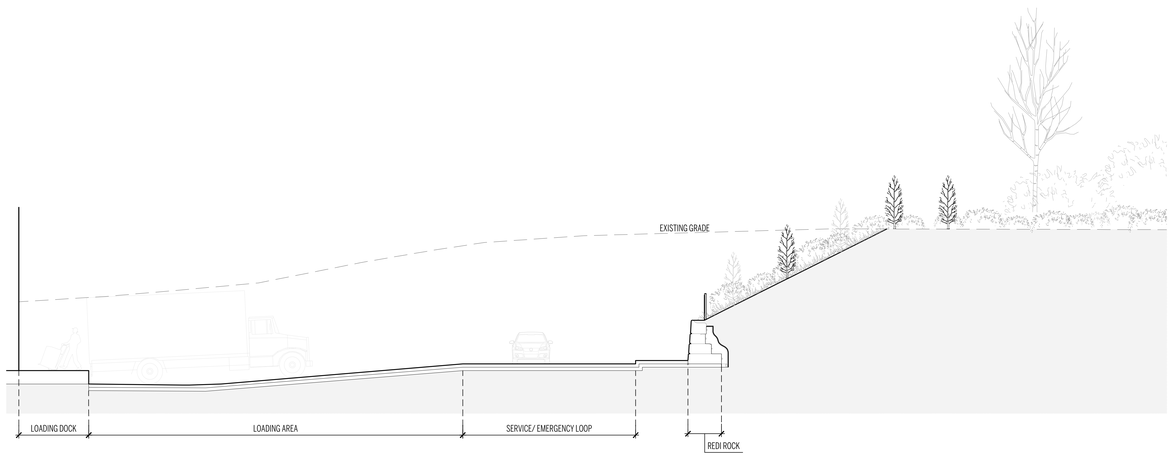

1 SECTION THROUGH LOADING DOCK
1/8" = 1' 0"

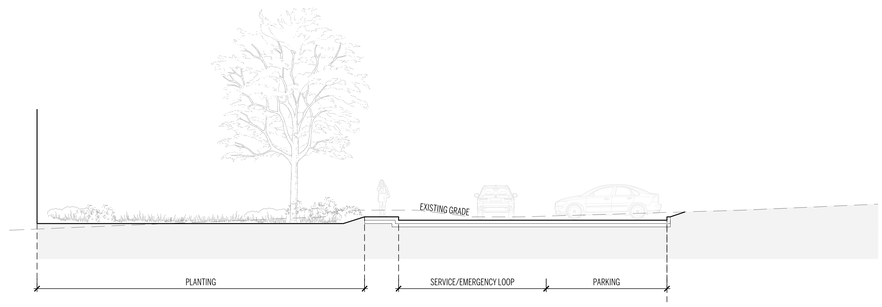

2 SECTION THROUGH SERVICE LOOP AND PARKING
1/8" = 1' 0"

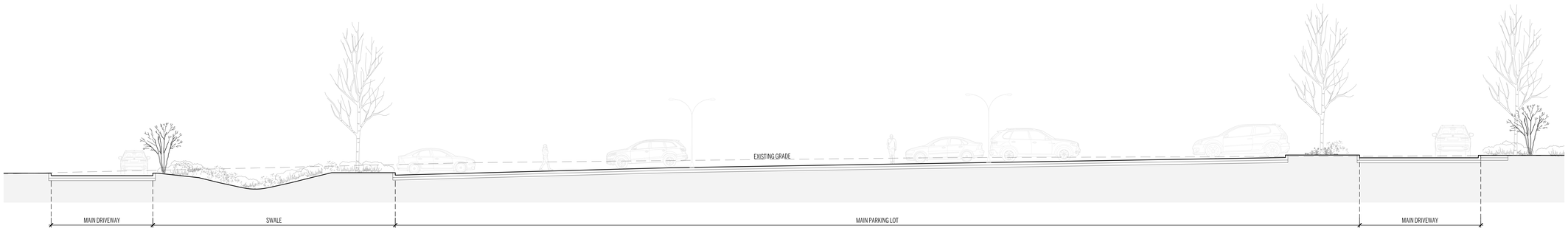

3 SECTION THROUGH PARKING
1/8" = 1' 0"

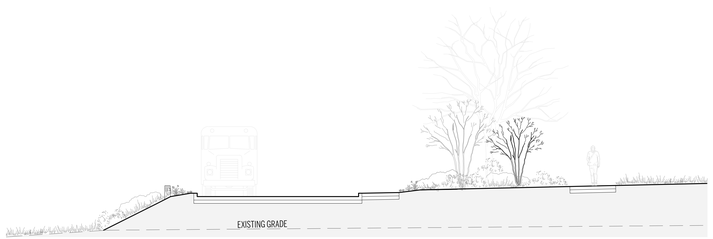

4 SECTION THROUGH BUS DROP-OFF
1/8" = 1' 0"

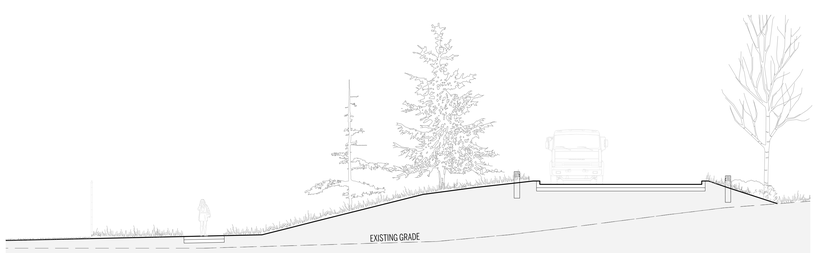

5 SECTION THROUGH FIRE ROUTE
1/8" = 1' 0"

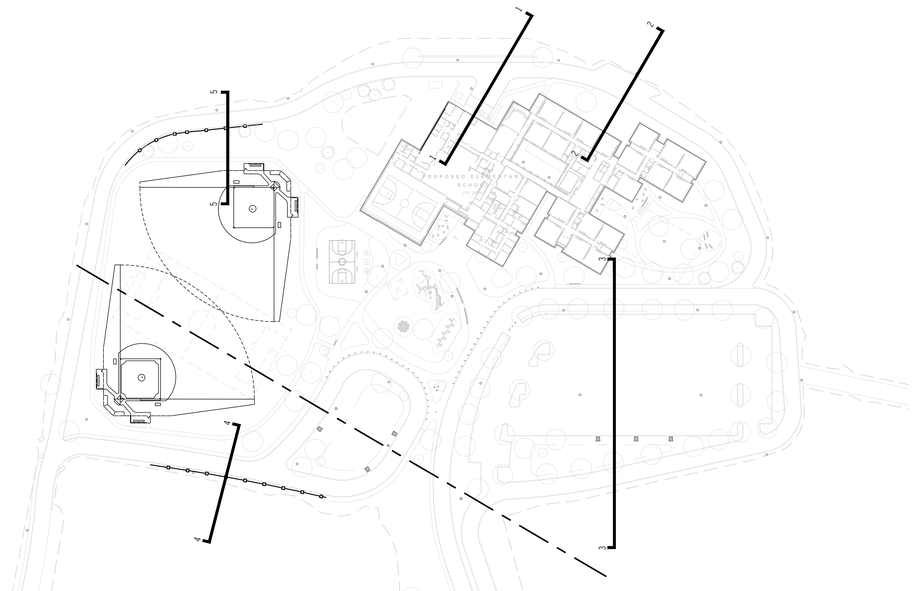

6 PLAN
1"=80'

ASHLAND, MASSACHUSETTS
Incorporated 1846

90 Concord Street, Ashland, MA

FLANSBURGH

77 NORTH WASHINGTON STREET
BOSTON, MA 02114-1910

FLANSBURGH.COM

Owner Project Manager

Compass Project Management, Inc.
Owners' Project Manager
One Edgewater Drive, Suite 204
Norwood, MA 02062

Consultants

Nitsch Engineering, Inc.
Land Survey/ Traffic/ Civil Engineers
2 Center Plaza
Boston, MA 02108

Stimson Studio
Landscape Architect
288 Norfolk Street
Cambridge, MA 02139

Engineers Design Group Inc
Structural Engineer
350 Main Street
Malden, MA 02148

Stefura Associates, Inc.
FF&E and Casework
77 North Washington Street
Boston, MA 02114

Crabtree McGrath Associates, Inc.
FF&E and Casework
161 West Main Street
Georgetown, MA 01833

Vanderweil Engineers, LLP
Mechanical Electrical Technology
Plumbing & Fire Protection Engineers
274 Summer Street
Boston, MA 02210

Fuss and O'Neill, Inc.
Hazardous Materials
108 Myrtle Street, Suite 502
Quincy, MA 02171

AM Fogarty
Cost Estimators
175 Derby St, Ste 5
Hingham, Massachusetts 02043

No.	Date	Note
		REVISIONS

No.	Date	Note
		ISSUE

Stamp



For Permitting Only

Key Plan

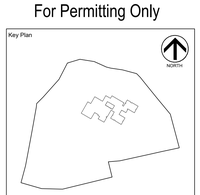

Sheet Title

SITE SECTIONS

Drawn By	Project ID 1914.00
Reviewed By	Scale
Issue Date 05.26.2021	Plot Date 05.26.2021

Sheet No.

L5.0

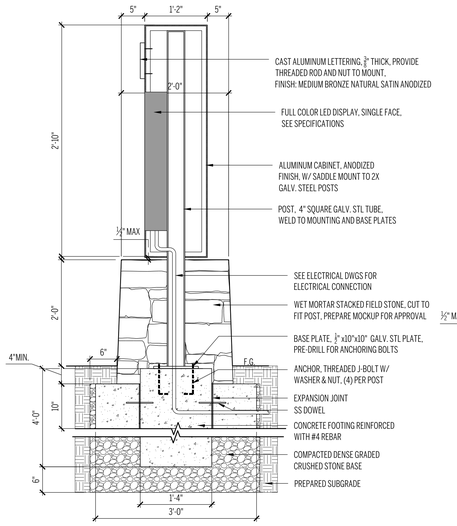

16 DIGITAL ENTRY SIGN TYPICAL SECTION
1"=1'-0"

NOTES:
1. SIGN FLIGHTS SHALL BE SET ON A TIMER TO TURN OFF BETWEEN THE HOURS OF 11 PM AND 7 AM.
2. CONTRACTOR SHALL OBTAIN A BUILDING PERMIT FROM THE BUILDING COMMISSIONER FOR THE INSTALLATION PRIOR TO INSTALLING.
3. DIGITAL DISPLAY SHALL BE PROGRAMMED FOR STATIC MESSAGES.
4. CONTRACTOR SHALL SUBMIT SHOP DRAWINGS TO LANDSCAPE ARCHITECT FOR APPROVAL.

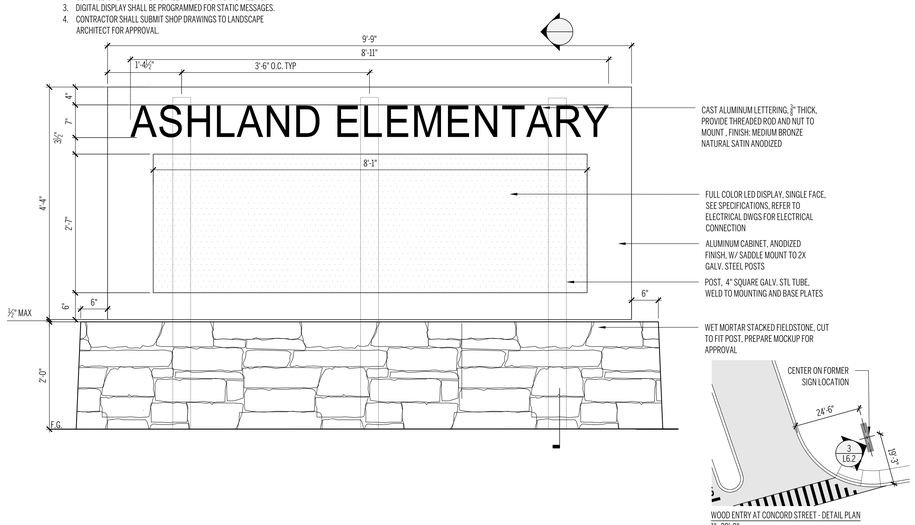

14 DIGITAL ENTRY SIGN ELEVATION
1"=1'-0"

WOOD ENTRY AT CONCORD STREET - DETAIL PLAN
1"=20'-0"

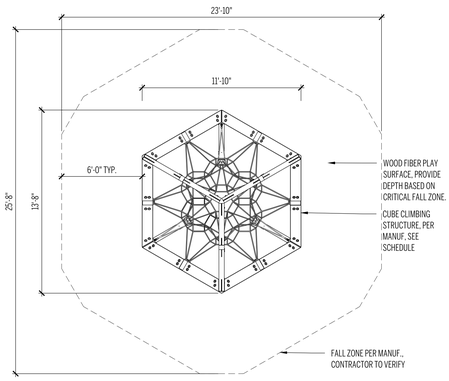

10 CUBE CLIMBING STRUCTURE
1/4"=1'-0"

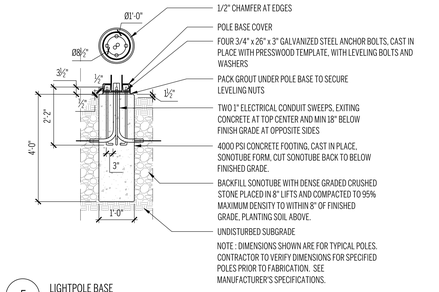

5 LIGHTPOLE BASE
1/2"= 1'-0"

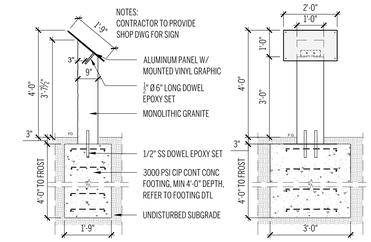

4 INTERPRETIVE SIGN
1/2"= 1'-0"

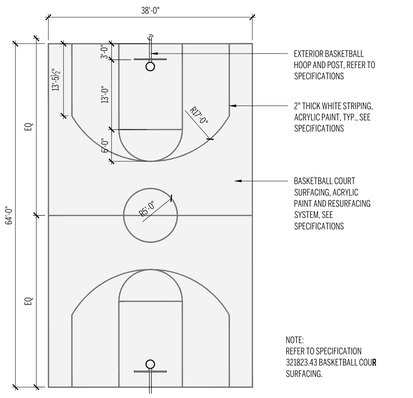

9 BASKETBALL COURT
1"= 1'-0"

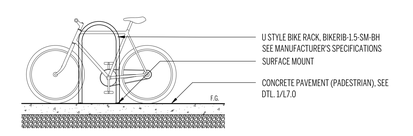

8 BIKE RACK
1/2"=1'-0"

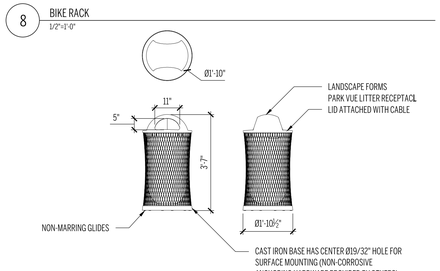

7 LANDSCAPE FORMS 'PARC VUE LITTER RECEPTACLE'
1/2"=1'-0"

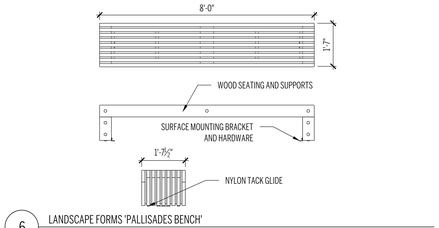

6 LANDSCAPE FORMS 'PALLISADES BENCH'
1/2"=1'-0"

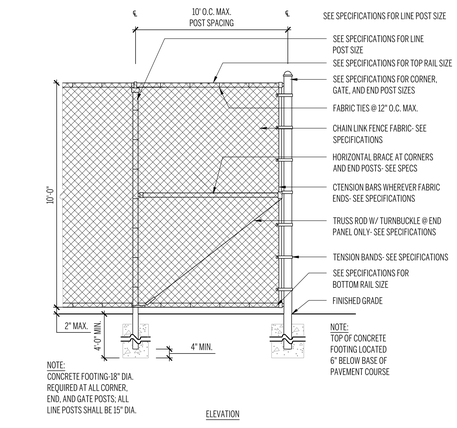

15 10' CHAIN LINK FENCE
NTS

NOTE:
CONCRETE FOOTING-18" DIA. REQUIRED AT ALL CORNER, END, AND GATE POSTS; ALL LINE POSTS SHALL BE 15" DIA.

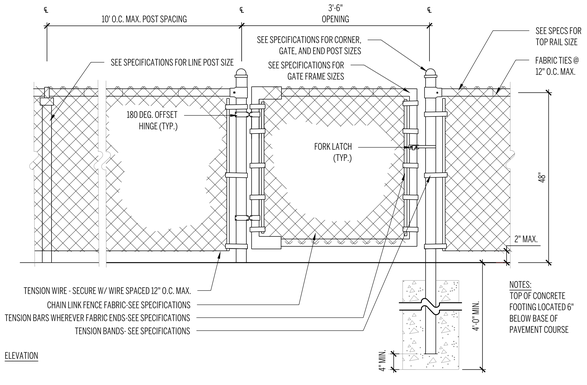

13 4' CHAIN LINK FENCE AND GATE
NTS

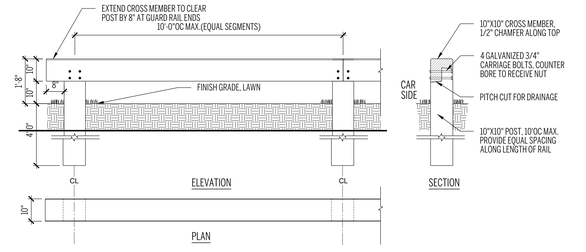

12 TIMBER GUARD RAIL
1/2"=1'-0"

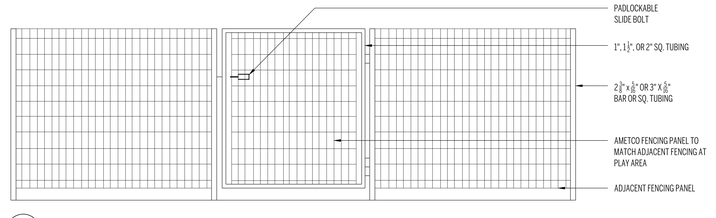

11 AMETCO STADIUM PANEL
1"=1'-0"

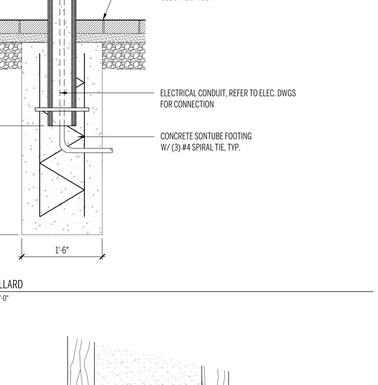

3 BOLLARD
1"= 1'-0"

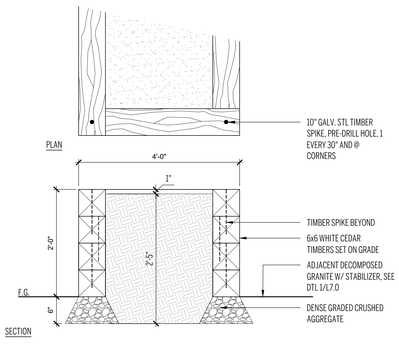

2 RAISED WOOD GARDEN BED
1"= 1'-0"

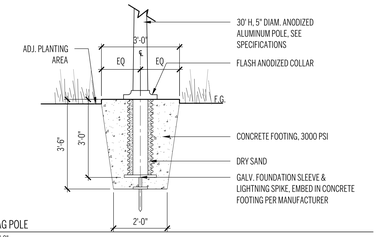

1 FLAG POLE
1"= 1'-0"

ASHLAND, MASSACHUSETTS Incorporated 1846
90 Concord Street, Ashland, MA

FLANSBURGH
77 NORTH WASHINGTON STREET
BOSTON, MA 02114-1910
FLANSBURGH.COM

Owner Project Manager
Compass Project Management, Inc.
Owners' Project Manager
One Edgewater Drive, Suite 204
Norwood, MA 02062

Consultants
Nitsch Engineering, Inc.
Land Survey/ Traffic/ Civil Engineers
2 Center Plaza
Boston, MA 02108

Stimson Studio
Landscape Architect
288 Norfolk Street
Cambridge, MA 02139

Engineers Design Group Inc
Structural Engineer
350 Main Street
Malden, MA 02148

Stefura Associates, Inc.
FF&E and Casework
77 North Washington Street
Boston, MA 02114

Crabtree McGrath Associates, Inc.
FF&E and Casework
161 West Main Street
Georgetown, MA 01833

Vanderweil Engineers, LLP
Mechanical Electrical Technology Plumbing & Fire Protection Engineers
274 Summer Street
Boston, MA 02210

Fuss and O'Neill, Inc.
Hazardous Materials
108 Myrtle Street, Suite 502
Quincy, MA 02171

AM Fogarty
Cost Estimators
175 Derby St, Ste 5
Hingham, Massachusetts 02043

No.	Date	Note
		REVISIONS

No.	Date	Note
		ISSUE

Stamp
COMMONWEALTH OF MASSACHUSETTS JOHN C. MCGRATH No. 973 REGISTERED LANDSCAPE ARCHITECT

For Permitting Only

Key Plan
NORTH

Sheet Title
SITE FURNISHINGS DETAILS

Drawn By	Project ID 1914.00
Reviewed By	Scale 1" = 40'-0"
Issue Date 05.26.2021	Plot Date 05.26.2021
Sheet No.	

L6.10

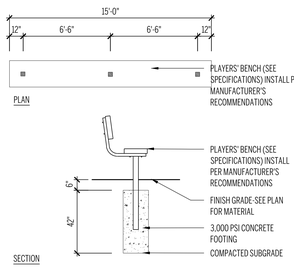

10 PLAYERS' BENCH INSTALLATION
NTS

NOTES:
1. REMOVE FULL DEPTH OF EXISTING LOAM AS PER SITE CLEARING AND EARTHWORK SPECIFICATIONS.
2. AVOID OVERCOMPACTION OF EXISTING SUBGRADE.
3. SCARIFY EXISTING SUBGRADE BEFORE INSTALLATION OF SKINNED BASEBALL INFIELD MATERIALS.
4. INSTALL FREE-DRAINING GRANULAR FILL TO A LEVEL OF 8"-10" BELOW FINISH GRADE. DEPENDING ON LOCATION (SEE SPECIFICATIONS FOR LOCATION DEPTHS).
5. INSTALL GRAVEL FILL TO A LEVEL OF 4"-6" BELOW FINISH GRADE, DEPENDING ON LOCATION (SEE SPECIFICATIONS FOR LOCATION DEPTHS).
6. INSTALL INFIELD MIX TO FINISH GRADE (SEE SPECIFICATIONS FOR LOCATION DEPTHS).
7. TREAT SUBGRADE AND SAND WITH APPROVED HERBICIDE.

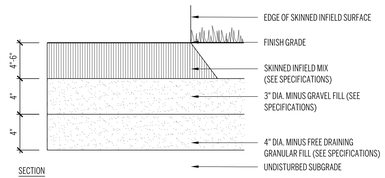

9 SKINNED BASEBALL INFIELD
NTS

NOTE:
1. THE LAYOUT SHOWN IS FOR THE FIRST BASE SIDE. THE THIRD BASE SIDE IS A MIRROR IMAGE OF THE LAYOUT SHOWN BELOW.
2. FOLLOW MANUFACTURER'S INSTRUCTIONS FOR INSTALLATION.
3. BASES:
- INSTALL BASE TOP 1" BELOW PLAYING SURFACE.

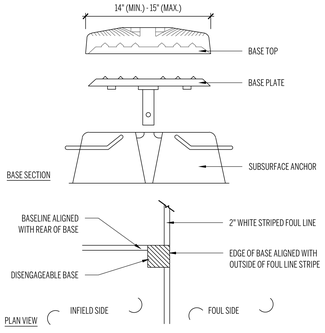

8 DISENGAGEABLE BASE INSTALLATION
NTS

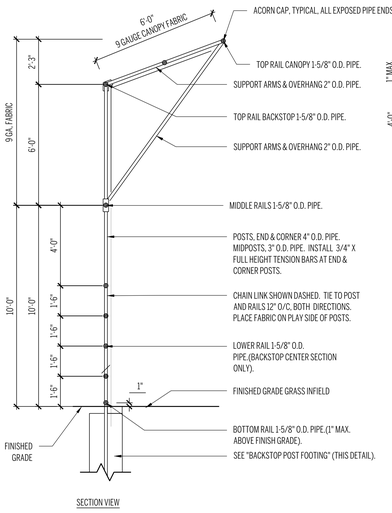

NOTES:
A. PROVIDE OVERLAP AT CANOPY AND BOTTOM OF FABRIC TO COMPLETELY SECURE TO POSTS & RAILS ALL FABRIC; 2" MESH, KNUCKLE SELVAGE BOTH ENDS.

4 BASEBALL BACKSTOP
NTS

NOTE:
1. SET TOP OF PITCHER'S PLATE 6" ABOVE ELEVATION OF HOME PLATE.

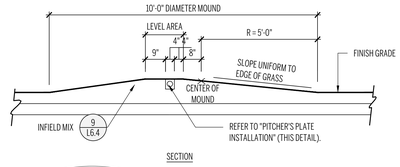

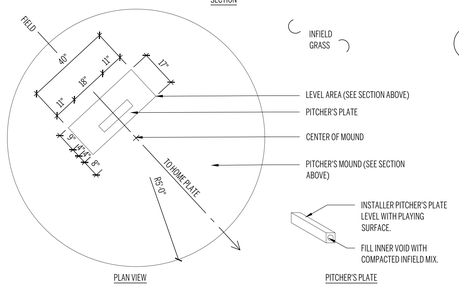

7 PITCHER'S MOUND FOR 60' BASEBALL DIAMOND
NTS

NOTE:
1. FOLLOW MANUFACTURER'S INSTRUCTIONS FOR INSTALLATION.
2. TOP OF GROUND ANCHOR SHOULD BE 1" ABOVE TOP OF CONCRETE AND 1" BELOW FINISH GRADE.
3. HOME PLATE:
INSTALL HOME PLATE LEVEL WITH PLAYING SURFACE.

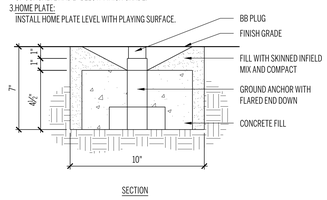

6 HOME PLATE INSTALLATION
NTS

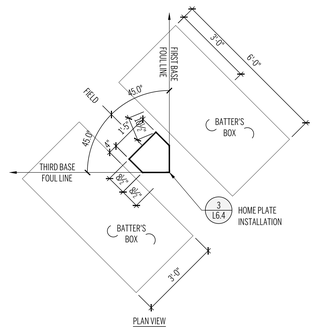

5 HOME PLATE AREA FOR 60' BASEBALL DIAMOND
NTS

NOTES:
1. REMOVE FULL DEPTH OF EXISTING LOAM AS PER SITE CLEARING AND EARTHWORK SPECIFICATIONS.
2. AVOID OVERCOMPACTION OF EXISTING SUBGRADE.
3. SCARIFY EXISTING SUBGRADE BEFORE INSTALLATION OF SEED OR SOD AREAS FOR BASEBALL FIELD.
4. INSTALL MATERIALS AS PER SPECIFICATIONS..

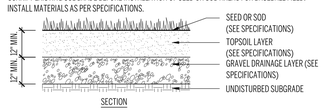

3 SEED OR SOD AREAS FOR BASEBALL FIELD
NTS

NOTES:
A. FOUL POLE SHALL BE INTEGRATED INTO OUTFIELD FENCE, ALIGNED WITH FIRST BASE AND THIRD BASE FOUL LINES.

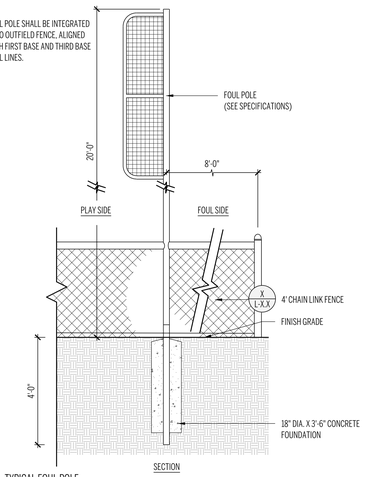

2 TYPICAL FOUL POLE
NTS

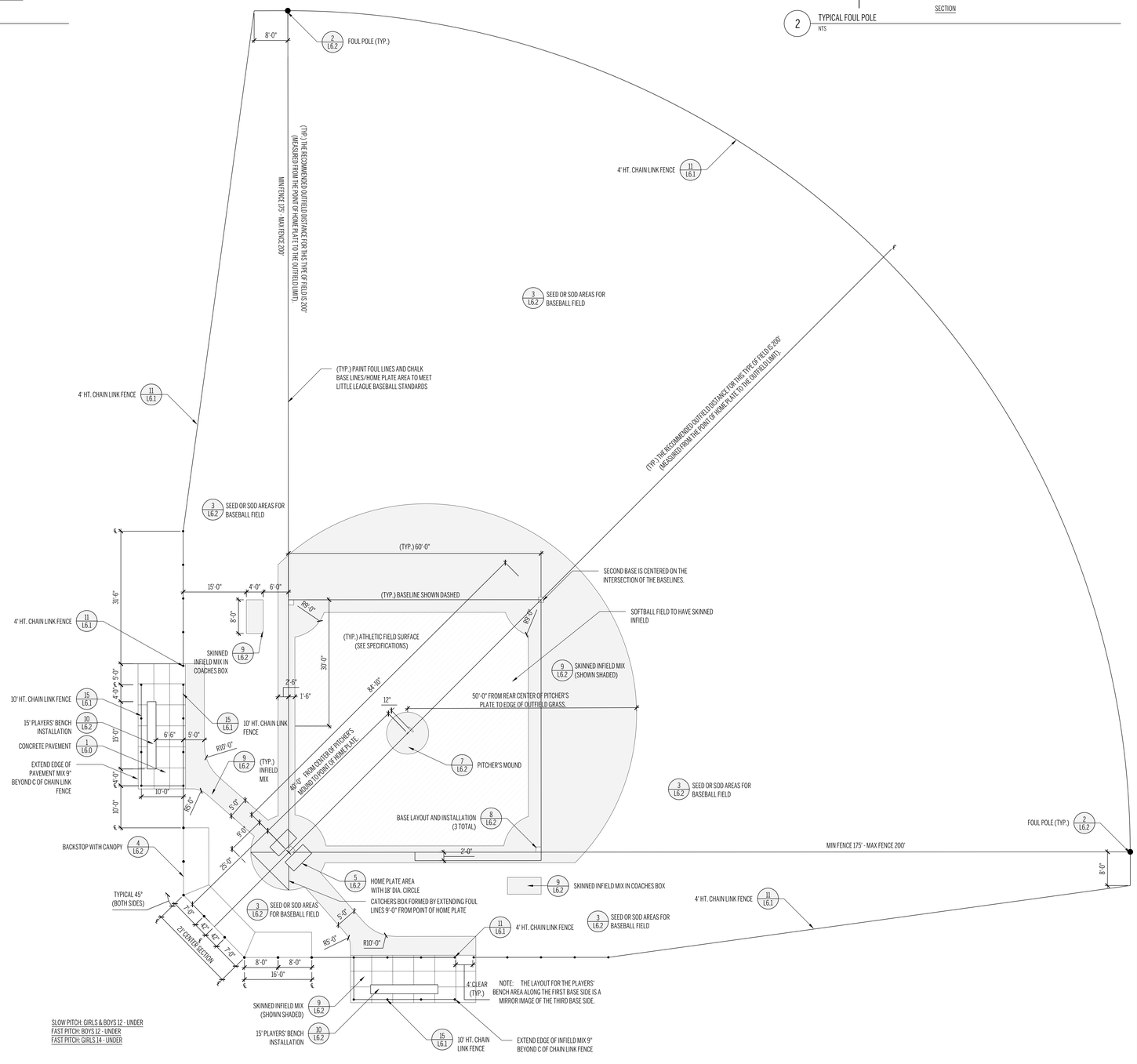

1 BASEBALL FIELD LAYOUT
NTS

ASHLAND, MASSACHUSETTS Incorporated 1846
90 Concord Street, Ashland, MA

FLANSBURGH
77 NORTH WASHINGTON STREET
BOSTON, MA 02114-1910
FLANSBURGH.COM

Owner Project Manager
Compass Project Management, Inc.
Owners' Project Manager
One Edgewater Drive, Suite 204
Norwood, MA 02062

Consultants
Nitsch Engineering, Inc.
Land Survey/ Traffic/ Civil Engineers
2 Center Plaza
Boston, MA 02108

Stimson Studio
Landscape Architect
288 Norfolk Street
Cambridge, MA 02139

Engineers Design Group Inc
Structural Engineer
350 Main Street
Malden, MA 02148

Stefura Associates, Inc.
FF&E and Casework
77 North Washington Street
Boston, MA 02114

Crabtree McGrath Associates, Inc.
FF&E and Casework
161 West Main Street
Georgetown, MA 01833

Vanderweil Engineers, LLP
Mechanical Electrical Technology
Plumbing & Fire Protection Engineers
274 Summer Street
Boston, MA 02210

Fuss and O'Neill, Inc.
Hazardous Materials
108 Myrtle Street, Suite 502
Quincy, MA 02171

AM Fogarty
Cost Estimators
175 Derby St, Ste 5
Hingham, Massachusetts 02043

No.	Date	Note
		REVISIONS
No.	Date	Note
		ISSUE

Stamp
COMMONWEALTH OF MASSACHUSETTS · KEVIN C. STONE · No. 973 · LANDSCAPE ARCHITECT

For Permitting Only

Key Plan
NORTH

Sheet Title
BALL FIELD LAYOUTS & DETAILS

Drawn By	Project ID 1914.00
Reviewed By	Scale
Issue Date 05.26.2021	Plot Date 05.26.2021
Sheet No.	

L6.20

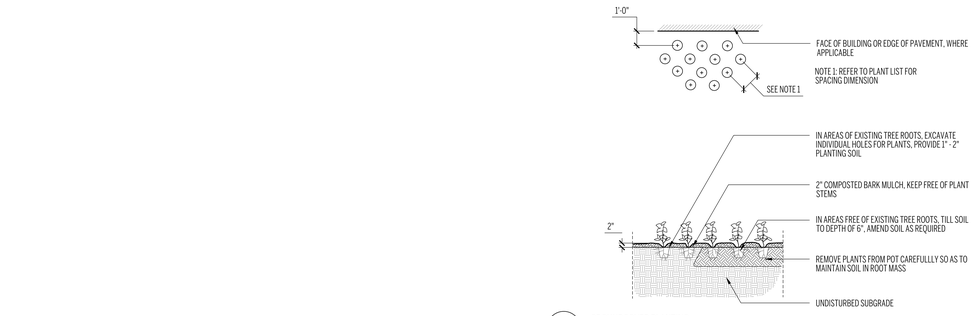

6 GROUNDCOVER PLANTING
1"=1'

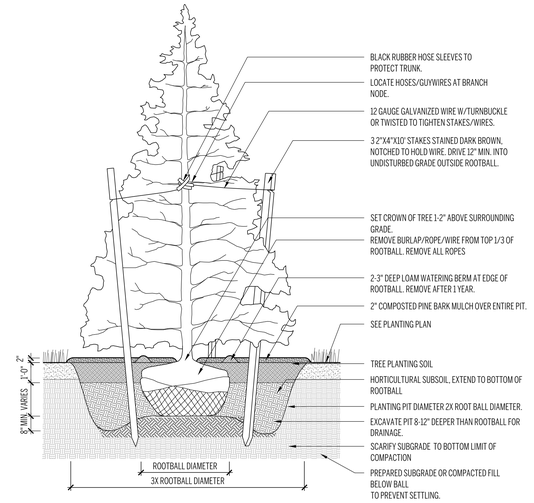

9 TREE PLANTING, EVERGREEN
3/8"=1'

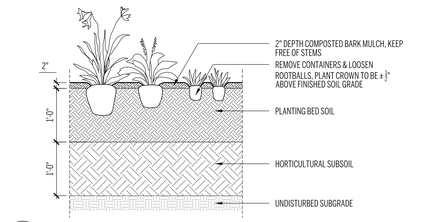

5 PERENNIAL AND GROUNDCOVER PLANTING
1"=1'

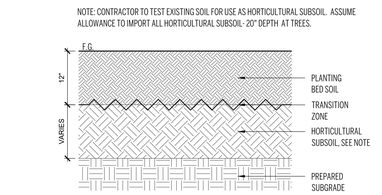

4 TREE SOIL PROFILE
1"=1'-0"

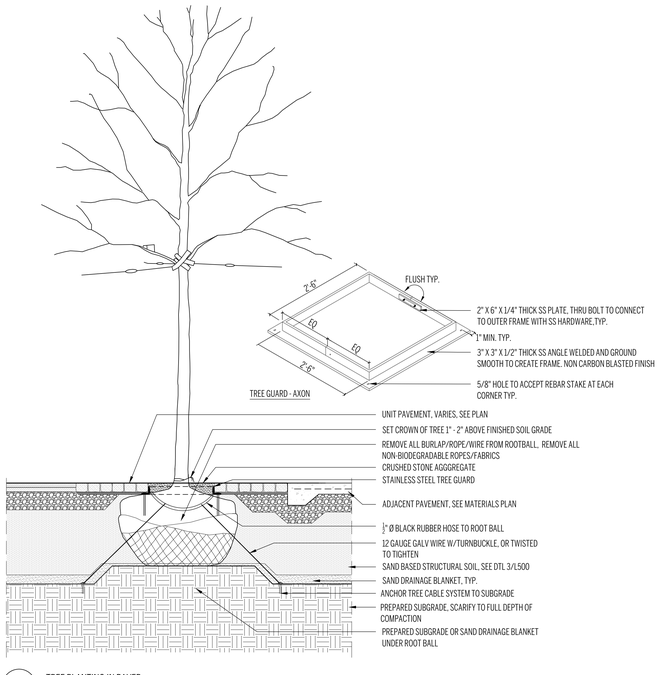

10 TREE PLANTING IN PAVER
1/2"=1'-0"

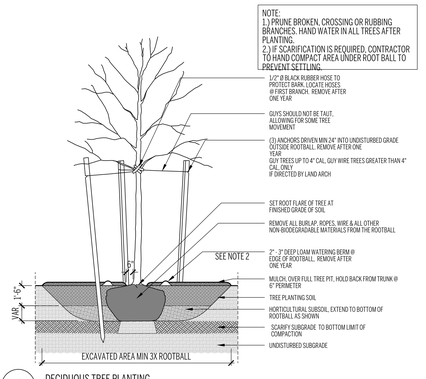

8 DECIDUOUS TREE PLANTING
1"=1'

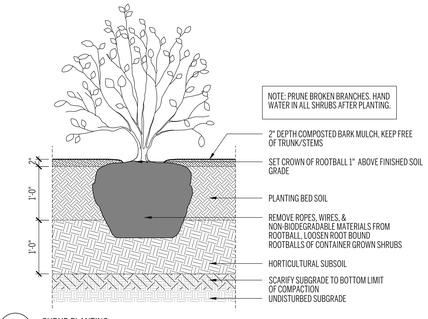

7 SHRUB PLANTING
1"=1'

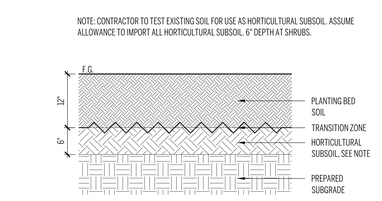

3 SHRUB, GROUNDCOVER, PERENNIAL SOIL PROFILE
1"=1'-0"

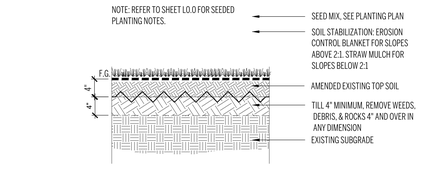

2 MEADOW SOIL PROFILE
1"=1'-0"

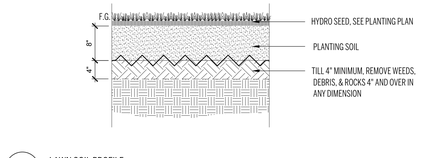

1 LAWN SOIL PROFILE
1"=1'-0"

ASHLAND, MASSACHUSETTS Incorporated 1846
90 Concord Street, Ashland, MA

FLANSBURGH

77 NORTH WASHINGTON STREET
BOSTON, MA 02114-1910

FLANSBURGH.COM

Owner Project Manager

Compass Project Management, Inc.
Owners' Project Manager
One Edgewater Drive, Suite 204
Norwood, MA 02062

Consultants

Nitsch Engineering, Inc.
Land Survey/ Traffic/ Civil Engineers
2 Center Plaza
Boston, MA 02108

Stimson Studio
Landscape Architect
288 Norfolk Street
Cambridge, MA 02139

Engineers Design Group Inc
Structural Engineer
350 Main Street
Malden, MA 02148

Stefura Associates, Inc.
FF&E and Casework
77 North Washington Street
Boston, MA 02114

Crabtree McGrath Associates, Inc.
FF&E and Casework
161 West Main Street
Georgetown, MA 01833

Vanderweil Engineers, LLP
Mechanical Electrical Technology
Plumbing & Fire Protection Engineers
274 Summer Street
Boston, MA 02210

Fuss and O'Neill, Inc.
Hazardous Materials
108 Myrtle Street, Suite 502
Quincy, MA 02171

AM Fogarty
Cost Estimators
175 Derby St, Ste 5
Hingham, Massachusetts 02043

No.	Date	Note
REVISIONS		
No.	Date	Note
ISSUE		

Stamp



For Permitting Only

Key Plan

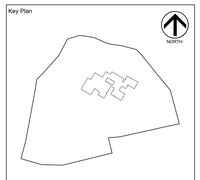

Sheet Title

PLANTING DETAILS

Drawn By	Project ID 1914.00
Reviewed By	Scale
Issue Date 05.26.2021	Plot Date 05.26.2021
Sheet No.	

L6.30

ASHLAND – DAVID MINDESS ELEMENTARY SCHOOL

Preliminary Logistics – PHASE 1: New Construction

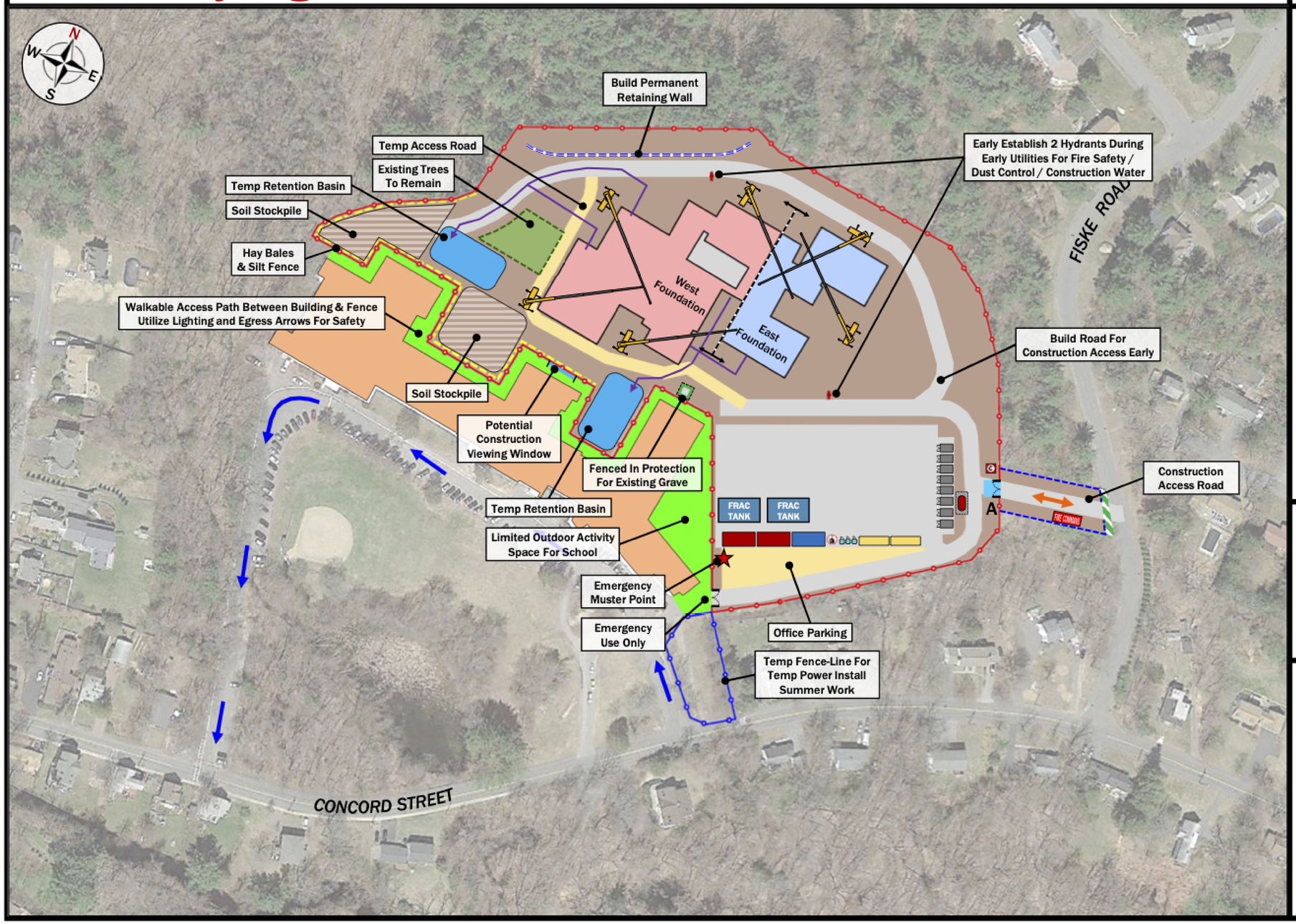

Diagram Key:

- Site Fence w/Scrim
- School Traffic
- Construction Traffic
- Swing Gate Access
- Wheel-Wash Station
- COVID-19 Check-In
- Hand Wash Station
- Worker Toilets
- Dumpster / Recycling
- Trade Storage Boxes
- Owner Site Office
- SDC Site Offices
- Subcontractor Site Office

Morning School Traffic Times:

Buses: 7:20am – 7:30am
Cars: 6:40am – 7:40am

Afternoon School Traffic Times:

Buses: 1:55pm – 2:05pm
Cars: 1:35pm – 2:25pm

Project Notes:

- Work Hours 7:00am to 3:30pm
- All construction deliveries / trucking between 8:00am and 1:00pm
- All construction traffic to access the site by the east side of Concord St.
- No construction access to proceed west on Concord St. beyond the school
- All contractor parking onsite inside fence

90 Concord Street, Ashland, MA

FLANSBURGH
77 NORTH WASHINGTON STREET
BOSTON, MA 02114-1910
FLANSBURGH.COM

Owner Project Manager

Compass Project Management, Inc.
Owners' Project Manager
One Edgewater Drive, Suite 204
Norwood, MA 02062

Consultants

Nitsch Engineering, Inc.
Land Survey/ Traffic/ Civil Engineers
2 Center Plaza
Boston, MA 02108

Stimson Studio
Landscape Architect
288 Norfolk Street
Cambridge, MA 02139

Engineers Design Group Inc
Structural Engineer
350 Main Street
Malden, MA 02148

Stefura Associates, Inc.
FF&E and Casework
77 North Washington Street
Boston, MA 02114

Crabtree McGrath Associates, Inc.
FF&E and Casework
161 West Main Street
Georgetown, MA 01833

Vanderweil Engineers, LLP
Mechanical Electrical Technology
Plumbing & Fire Protection Engineers
274 Summer Street
Boston, MA 02210

Fuss and O'Neill, Inc.
Hazardous Materials
108 Myrtle Street, Suite 502
Quincy, MA 02171

AM Fogarty
Cost Estimators
175 Derby St, Ste 5
Hingham, Massachusetts 02043

No.	Date	Note
REVISIONS		
No.	Date	Note
ISSUE		

Stamp

For Permitting Only

Key Plan

Sheet Title: Phase 1: New Construction

Drawn By	Project ID: 1914.00
Reviewed By: FAI	Scale: 1/8"=1'-0"
Issue Date: 05.26.2021	Plot Date: 05.26.2021

Sheet No.: **PH.1**

ASHLAND – DAVID MINDESS ELEMENTARY SCHOOL

Preliminary Logistics – PHASE 2A: Demo & Site Prep

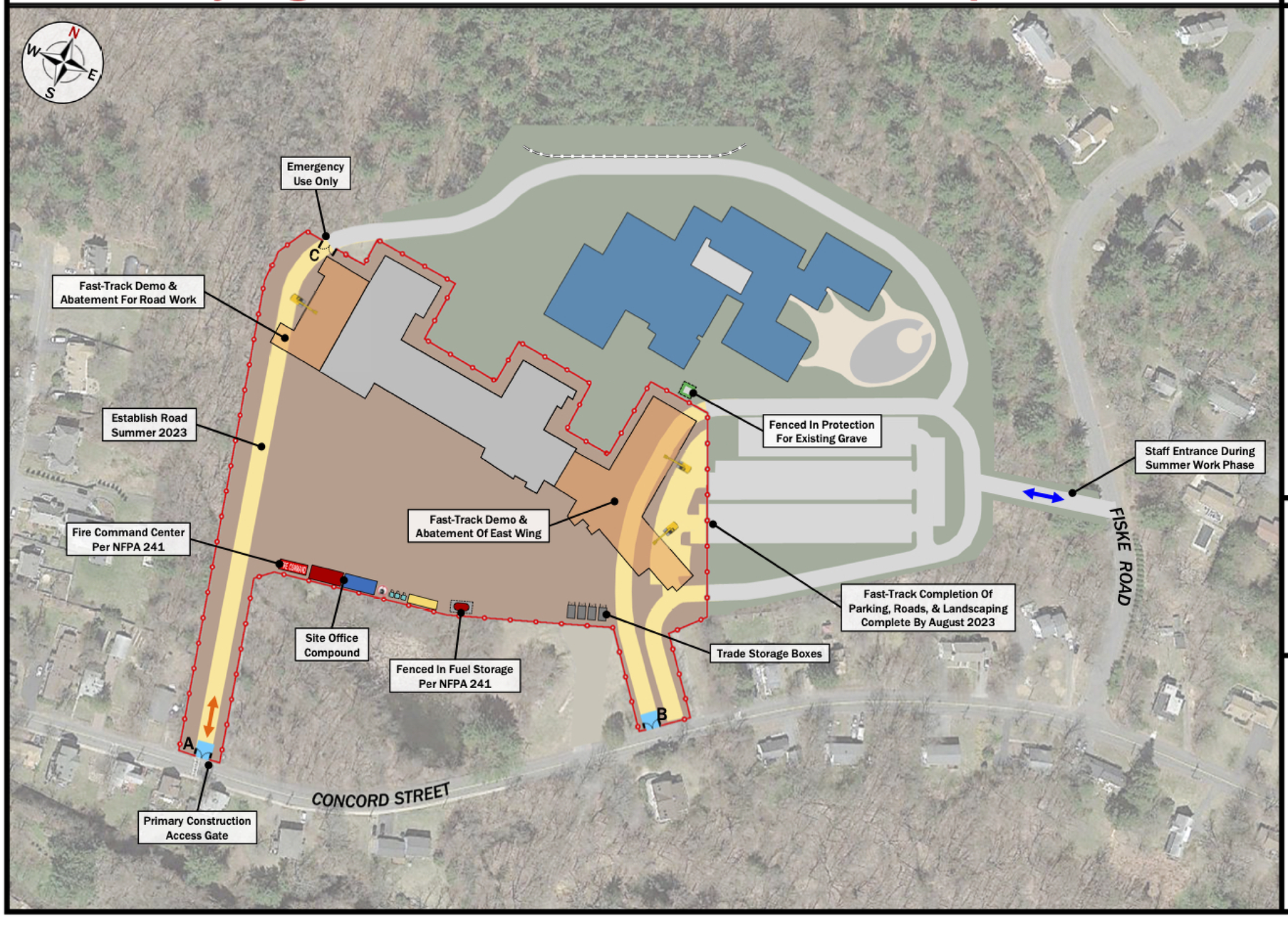

Diagram Key:

- Site Fence w/Scrim
- School Traffic
- Construction Traffic
- Swing Gate Access
- Wheel-Wash Station
- COVID-19 Check-In
- Hand Wash Station
- Worker Toilets
- Dumpster / Recycling
- Trade Storage Boxes
- Owner Site Office
- SDC Site Offices
- Subcontractor Site Office

Morning School Traffic Times:

Buses: 7:20am – 7:30am
Cars: 6:40am – 7:40am

Afternoon School Traffic Times:

Buses: 1:55pm – 2:05pm
Cars: 1:35pm – 2:25pm

Project Notes:

- Work Hours 7:00am to 3:30pm
- All construction deliveries / trucking between 8:00am and 1:00pm
- All construction traffic to access the site by the east side of Concord St.
- No construction access to proceed west on Concord St. beyond the school
- All contractor parking onsite inside fence

90 Concord Street, Ashland, MA

FLANSBURGH
77 NORTH WASHINGTON STREET
BOSTON, MA 02114-1910
FLANSBURGH.COM

Owner Project Manager

Compass Project Management, Inc.
Owners' Project Manager
One Edgewater Drive, Suite 204
Norwood, MA 02062

Consultants

Nitsch Engineering, Inc.
Land Survey/ Traffic/ Civil Engineers
2 Center Plaza
Boston, MA 02108

Stimson Studio
Landscape Architect
288 Norfolk Street
Cambridge, MA 02139

Engineers Design Group Inc
Structural Engineer
350 Main Street
Malden, MA 02148

Stefura Associates, Inc.
FF&E and Casework
77 North Washington Street
Boston, MA 02114

Crabtree McGrath Associates, Inc.
FF&E and Casework
161 West Main Street
Georgetown, MA 01833

Vanderweil Engineers, LLP
Mechanical Electrical Technology
Plumbing & Fire Protection Engineers
274 Summer Street
Boston, MA 02210

Fuss and O'Neill, Inc.
Hazardous Materials
108 Myrtle Street, Suite 502
Quincy, MA 02171

AM Fogarty
Cost Estimators
175 Derby St, Ste 5
Hingham, Massachusetts 02043

No.	Date	Note
		REVISIONS

No.	Date	Note
		ISSUE

Stamp

For Permitting Only

Key Plan

Sheet Title
Phase 2A: Demo & Site Prep

Drawn By	Project ID 1914.00
Reviewed By FAI	Scale 1/8"=1'-0"
Issue Date 05.26.2021	Plot Date 05.26.2021

Sheet No.
PH.2

ASHLAND – DAVID MINDESS ELEMENTARY SCHOOL

Preliminary Logistics – PHASE 2B: New School Opens / Demo

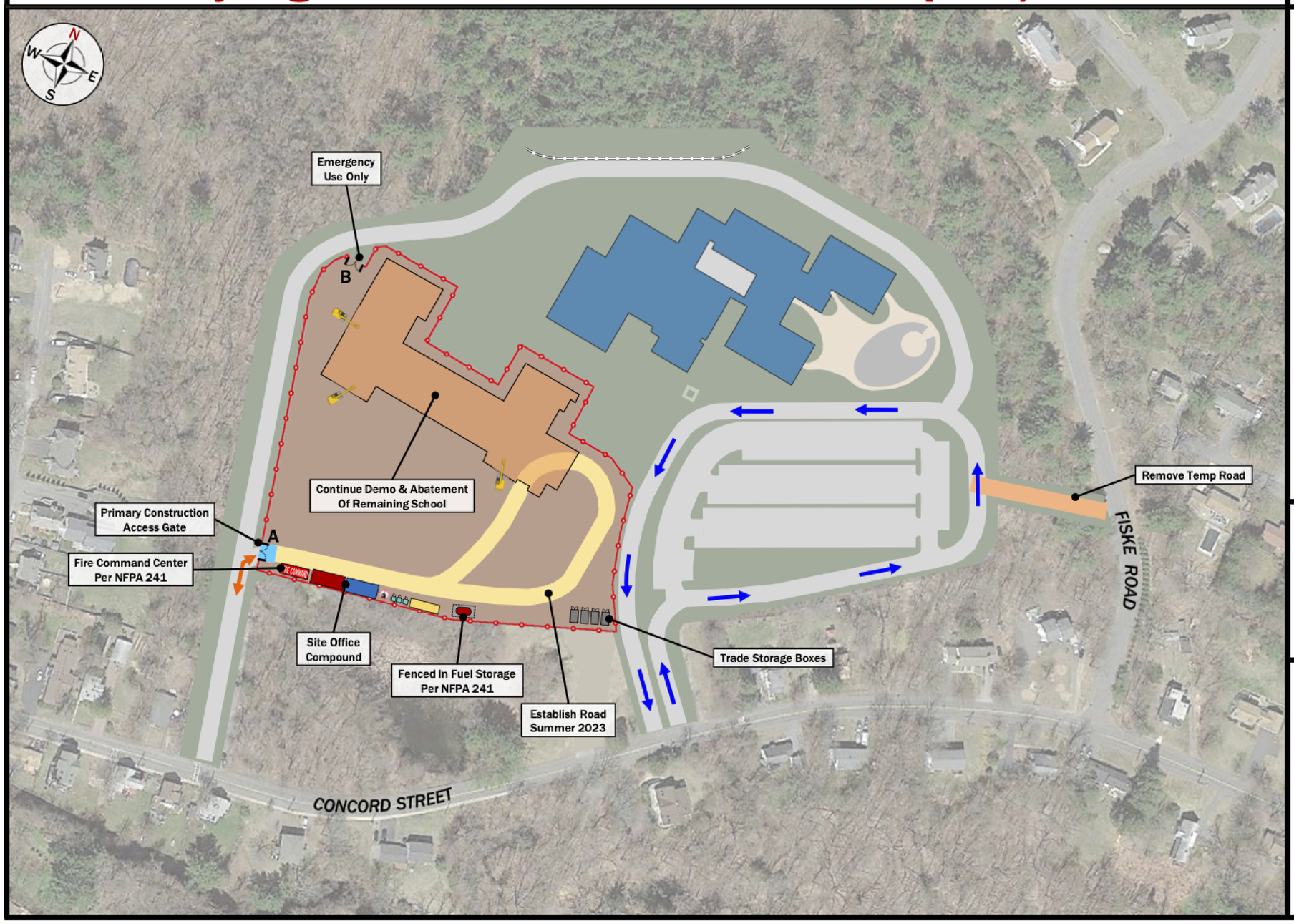

Diagram Key:

- Site Fence w/Scrim
- School Traffic
- Construction Traffic
- Swing Gate Access
- Wheel-Wash Station
- COVID-19 Check-In
- Hand Wash Station
- Worker Toilets
- Dumpster / Recycling
- Trade Storage Boxes
- Owner Site Office
- SDC Site Offices
- Subcontractor Site Office

Morning School Traffic Times:

Buses: 7:20am – 7:30am
Cars: 6:40am – 7:40am

Afternoon School Traffic Times:

Buses: 1:55pm – 2:05pm
Cars: 1:35pm – 2:25pm

Project Notes:

- Work Hours 7:00am to 3:30pm
- All construction deliveries / trucking between 8:00am and 1:00pm
- All construction traffic to access the site by the east side of Concord St.
- No construction access to proceed west on Concord St. beyond the school
- All contractor parking onsite inside fence

ASHLAND, MASSACHUSETTS Incorporated 1846
90 Concord Street, Ashland, MA

FLANSBURGH
77 NORTH WASHINGTON STREET
BOSTON, MA 02114-1910
FLANSBURGH.COM

Owner Project Manager

Compass Project Management, Inc.
Owners' Project Manager
One Edgewater Drive, Suite 204
Norwood, MA 02062

Consultants

Nitsch Engineering, Inc.
Land Survey/ Traffic/ Civil Engineers
2 Center Plaza
Boston, MA 02108

Stimson Studio
Landscape Architect
288 Norfolk Street
Cambridge, MA 02139

Engineers Design Group Inc
Structural Engineer
350 Main Street
Malden, MA 02148

Stefura Associates, Inc.
FF&E and Casework
77 North Washington Street
Boston, MA 02114

Crabtree McGrath Associates, Inc.
FF&E and Casework
161 West Main Street
Georgetown, MA 01833

Vanderweil Engineers, LLP
Mechanical Electrical Technology Plumbing & Fire Protection Engineers
274 Summer Street
Boston, MA 02210

Fuss and O'Neill, Inc.
Hazardous Materials
108 Myrtle Street, Suite 502
Quincy, MA 02171

AM Fogarty
Cost Estimators
175 Derby St, Ste 5
Hingham, Massachusetts 02043

No.	Date	Note
		REVISIONS

No.	Date	Note
		ISSUE

Stamp

For Permitting Only

Key Plan

Sheet Title
Phase 2B: New School Opens / Demo

Drawn By	Project ID 1914.00
Reviewed By FAI	Scale 1/8"=1'-0"
Issue Date 05.26.2021	Plot Date 05.26.2021

Sheet No.
PH.3

ASHLAND – DAVID MINDESS ELEMENTARY SCHOOL

Preliminary Logistics – PROJECT COMPLETE

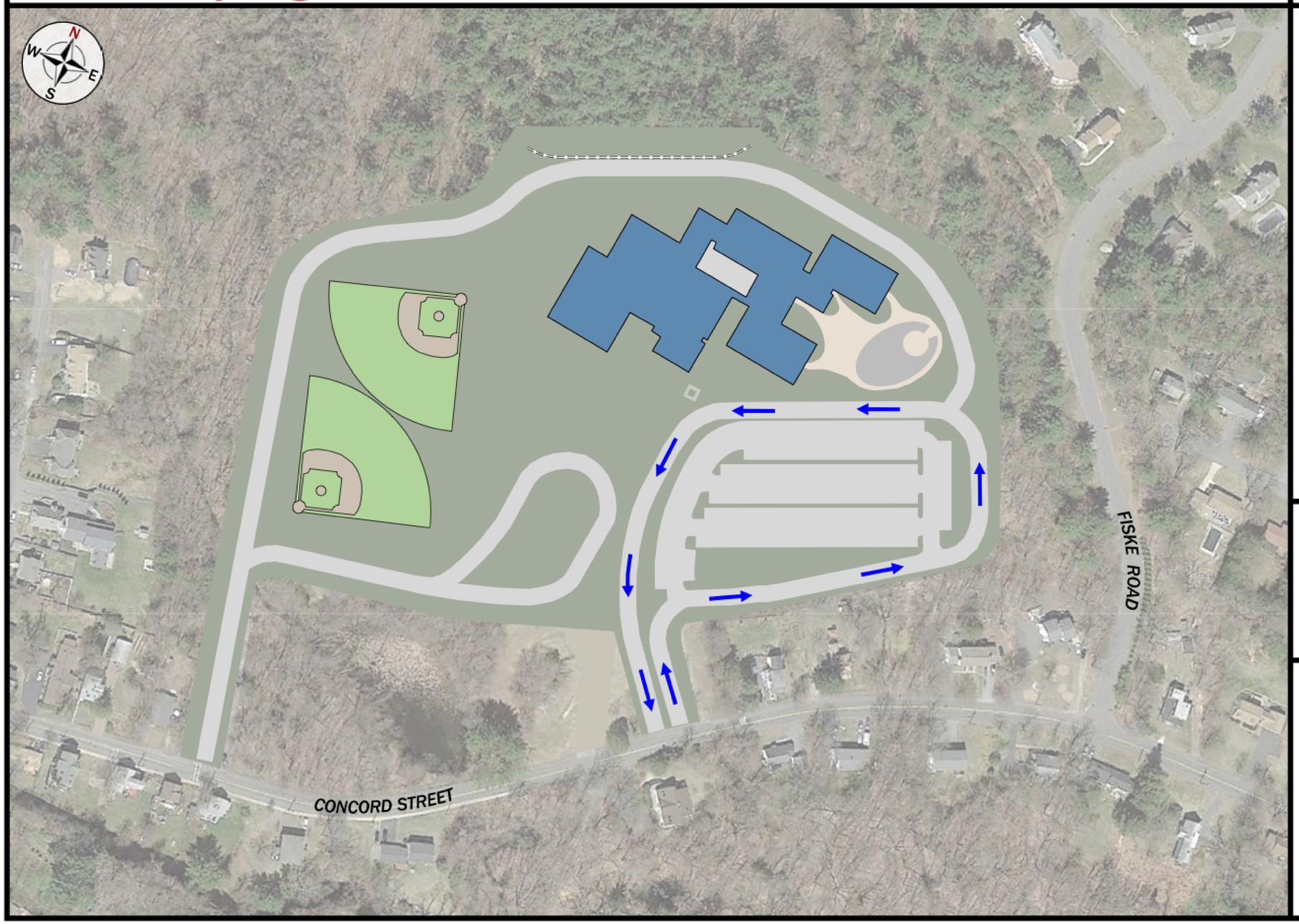

Diagram Key:

- Site Fence w/Scrim
- School Traffic
- Construction Traffic
- Swing Gate Access
- Wheel-Wash Station
- COVID-19 Check-In
- Hand Wash Station
- Worker Toilets
- Dumpster / Recycling
- Trade Storage Boxes
- Owner Site Office
- SDC Site Offices
- Subcontractor Site Office

Morning School Traffic Times:

Buses: 7:20am – 7:30am
Cars: 6:40am – 7:40am

Afternoon School Traffic Times:

Buses: 1:55pm – 2:05pm
Cars: 1:35pm – 2:25pm

ASHLAND, MASSACHUSETTS Incorporated 1846
90 Concord Street, Ashland, MA

FLANSBURGH
77 NORTH WASHINGTON STREET
BOSTON, MA 02114-1910
FLANSBURGH.COM

Owner Project Manager

Compass Project Management, Inc.
Owners' Project Manager
One Edgewater Drive, Suite 204
Norwood, MA 02062

Consultants

Nitsch Engineering, Inc.
Land Survey/ Traffic/ Civil Engineers
2 Center Plaza
Boston, MA 02108

Stimson Studio
Landscape Architect
288 Norfolk Street
Cambridge, MA 02139

Engineers Design Group Inc
Structural Engineer
350 Main Street
Malden, MA 02148

Stefura Associates, Inc.
FF&E and Casework
77 North Washington Street
Boston, MA 02114

Crabtree McGrath Associates, Inc.
FF&E and Casework
161 West Main Street
Georgetown, MA 01833

Vanderweil Engineers, LLP
Mechanical Electrical Technology Plumbing & Fire Protection Engineers
274 Summer Street
Boston, MA 02210

Fuss and O'Neill, Inc.
Hazardous Materials
108 Myrtle Street, Suite 502
Quincy, MA 02171

AM Fogarty
Cost Estimators
175 Derby St, Ste 5
Hingham, Massachusetts 02043

No.	Date	Note
		REVISIONS

No.	Date	Note
		ISSUE

Stamp

For Permitting Only

Key Plan

Sheet Title

Project Complete

Drawn By	Project ID 1914.00
Reviewed By FAI	Scale 1/8"=1'-0"
Issue Date 05.26.2021	Plot Date 05.26.2021

Sheet No.

PH.4